General catalogue

Precision creates value

www.jso.de

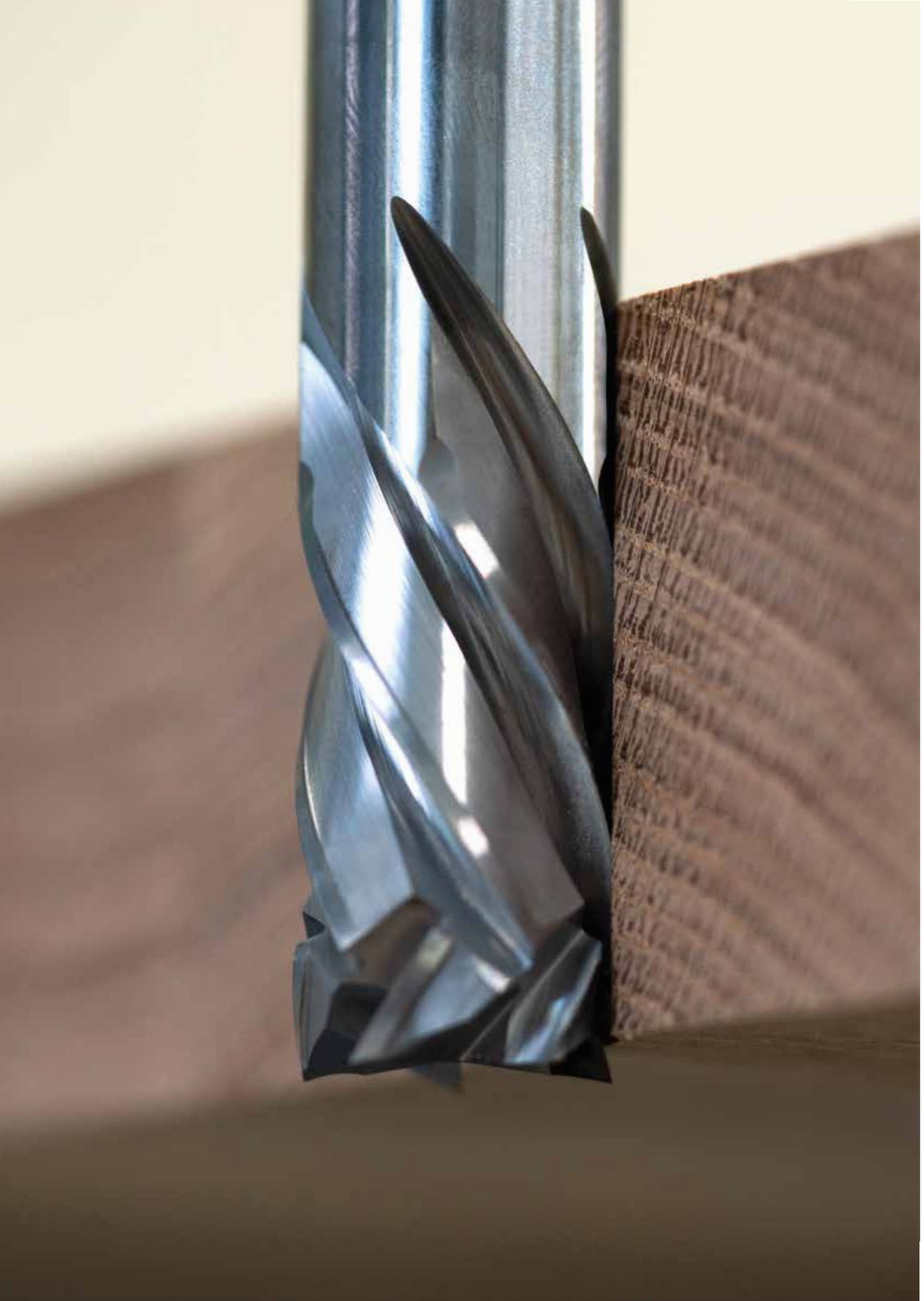

Precision creates value

Managing Director
JSO, Neresheim

As a technician, I assure our customers that our motto
“Precision creates value” is a promise they can trust.

„Precision creates values“ is not our motto for nothing.

Since 1882 – we have been gaining experience, learning from it and developing further. What was once designed on a drawing board is now developed and manufactured with the best technical equipment in conjunction with our many years of know-how and expertise.

A machine park equipped with the latest technology, together with our highly skilled workforce is what is required for the economic production of our batch series and special-purpose products.

Flexibility, reliability and dependable delivery, combined with our renowned technical expertise are the attributes that have made JSO a world-leading manufacturer of cutting tools for wood-working and plastics machining.

Martin Hübenthal

Precision creates value

Materials

In the field of drilling, milling and clamping tools for machining wood and plastics, we at Jakob Schmid have been a driving force and innovator for decades.

ogether with scientific institutions, we carry out fundamental research and development into new and innovati¬ve products in a wide variety of sectors.

Whether solid wood, board materials such as MDF, various thermosets and thermo-plastics or even combinations of different types of material, this is nothing new for us.

The machining of a variety of coatings such as solid wood veneers, lacquer foils, paper coatings or HPL layers is also no problem.

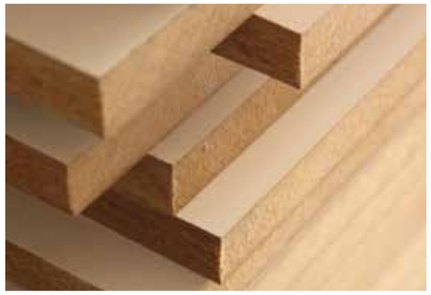

Tool service

When it comes to servicing your tools, you can depend on JSO, the manufacturer of quality tools.

State-of-the-art equipment, reliable order processing and quality standards as with new tools are a matter of course for us.

Whether carbide or diamond tools, you will always get the best possible service from JSO.

Special-purpose designs

Machining of materials that are difficult to machine, special profiles or other customer-specific requirements, cannot always be met with standard tools.

On the one hand, our many years of experience stand us in good stead when it comes to developing customized solutions.

On the other hand, our experienced team of production staff, design engineers and application technicians can also react quickly to new challenges.

Thanks to our depth of manufacturing in-house, we can respond extremely quickly and flexibly.

Precision creates value

Product range

For over 140 years, craftsmen and industry have relied on tools from JSO. As a leading manufacturer of high-quality drilling, milling and clamping tools, we supply customers worldwide in the woodworking, plastics, aerospace and automotive industries. Our product range includes around 5,000 different, highly innovative products.

Industries & Partnerships

In the wood and plastics processing industry, the company JSO has stood for quality and innovation for decades, such as in the field of industry, crafts and the specialized trade. From carpenters and joiners to specialized trade fair builders and the furniture industry, customers all over the world rely on JSO tools. In addition, we use our know-how in the machining of fiber-reinforced plastics to open up new markets and sectors. For example, we are active in various aerospace and automotive industry projects with innovative system solutions in the field of composite machining. Here, it is essential to meet the high requirements in terms of precision and machining quality. We realize this with specially developed tool concepts. In connection with the partnerships with ATEMAG and C6, JSO has been able to develop into a competitive company in this industry.

C6 COMPOSITE TOOLING

ATEMAG where needs find solutions

1 Tools for Portable Routers

2 Drills

3 Solid Carbide Milling Cutters

4 Reversible Milling Cutters & Carbide Cutters

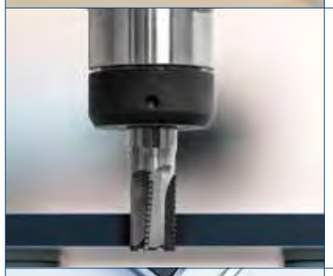

5 Diamond Cutters

6 Clamping tools

7 Spare Parts, Accessories and Services

Table of Contents

Article		Page
Tools for Portable Routers		
Grooving Cutter TCT Z2		1.1
Grooving Cutters TCT Z2	with TCT plunge tip	1.2
Grooving Cutters TCT Z2	with TCT plunge tip	1.3
Grooving Cutters TCT Z2	with TCT plunge tip	1.4
Grooving Cutters with reversible TC		1.5
Grooving Cutters with reversible TC		1.6
Grooving Cutters with reversible TC		1.7
Grooving/Face Plate Cutters w.rev.		1.8
Grooving Cutters with reversible TC		1.9
Dovetail Cutter with reversible TC		1.9
Dovetail Cutters TCT Z2		1.10
Panel Pilot Cutters TCT Z1		1.10
Panel Pilot Cutters TCT Z1+1		1.11
Weatherstrip Cutters TC Z2		1.11
V-Grooving/Engraving Cutters TC Z3	interch. shank design	1.12
V-Grooving/Engraving Cutters TC Z3	interch. shank design	1.12
V-Grooving/Engraving Cutters TCT		1.13
V-Grooving/Bevelling Cutters TCT Z1	interch. shank design	1.13
Decorative Groove Cutter w.		1.14
Bevel Cutters TCT Z2		1.15
Bevel Cutters TCT Z2	with ball bearing guide	1.16
Bevel Trimming Cutters TCT Z2		1.16
Bevel Cutters TCT Z2		1.17
Bevel Cutter TCT Z2	Corian / Varicor	1.17
Bevel Trimming Cutter TCT Z3		1.18
Square Trimming Cutters TCT Z2		1.18
Trimming and Copying Cutters TCT	interch. shank design	1.19
Double Edge Trimming Cutters w.		1.20
Trimming and Copying Cutters w.		1.21
Square Trimming Cutters w. rev. TC		1.21
Square Trimming Cutters w. rev. TC		1.22
Inlay Trimming Cutter w. rev. TC tips	Corian / Varicor	1.23
Trimming Cutters w. rev. TC tips Z2		1.23
Bevel Trimming Cutters w. rev. TC		1.24
UNITEC Rebating Cutters w. rev. TC		1.24
Rebating Cutters TCT Z2	interchangeable shank design	1.25
Rebating/Surfacing Cutter with rev.		1.26
Trimming and Surfacing Cutters TCT		1.26
Trimming and Surfacing CuttersTCT	Corian / Varicor	1.27
Stepped Cutters for closure fittings		1.27
Slot Bits TCT	for FESTO - DOMINO	1.28
Laminate Floor Slotting Cutter Sets		1.28
Biscuit Slotting Cutter Set TCT Z2		1.29
Weatherstrip Cutter Sets TCT Z2		1.29
Grooving Saws TCT Z2		1.30
Arbors	with spacers	1.31
Arbors	with ball bearing guide	1.31
Arbors	interchangeable shank design	1.32
Arbors	with ball bearing guide	1.33
Core Box Cutters TCT Z2	one-piece design	1.33
Core Box Cutters TCT Z2	interchangeable shank design	1.34
Water Channel Cutters TCT Z2	Corian / Varicor	1.34
Core Box Cutters w.rev. TC tip Z1	with circular tip	1.35
Core Box Cutter TCT Z2	one-piece design	1.35
Cove Cutters TCT Z2	interchangeable shank design	1.36
Ovolo Cutters TCT Z2	interchangeable shank design	1.36
Ovolo Cutters TCT Z2	interchangeable shank design	1.37
Ovolo Cutters TCT Z2	interchangeable shank design	1.38
Rounding Over Cutters TCT Z2	interchangeable shank design	1.39
Ovolo Cutters TCT Z2	one-piece design	1.40
Rounding Over Cutters TCT Z2	one-piece design	1.40
Rounding Over Cutters TCT Z2	for portable edge rounding machines	1.41
Rounding Over Cutters w. rev. TC		1.41
UNITEC Rounding Over / Ovolo		1.42
UNITEC Rounding Over / Ovolo	continuation	1.43
Profile Cutters for Arched Windows		1.44
Double Radius Cutter TCT Z4+4	Corian / Varicor	1.44
Overlay Timming Cutter TCT Z2	Corian / Varicor	1.45
Overlay Trimming Cutter TCT Z2	Corian / Varicor	1.45
Profile Cutter TCT Z2	Corian / Varicor	1.46
Profile Cutter TCT Z2		1.46
Ball Grooving Cutters TCT Z2		1.47
Finger Pull Cutters TCT Z2		1.47

Article		Page
Roman Ogee Cutter TCT Z2	interchangeable shank design	1.48
UNITEC Profile Cutters TC Z2	interchangeable shank design	1.49
Roman Ogee Cutters TCT Z2	interchangeable shank design	1.50
Classical Cutters TCT Z2	interchangeable shank design	1.50
Sunk Bead Cutters TCT Z2	interchangeable shank design	1.51
Raised Panel Cutter TCT Z2		1.51
Collet Chucks		1.52
Reduction pieces		1.52
Interchangeable Shanks		1.53
Slotted Bushings		1.53
DIAFORM-PCD Router Cutters Z2	for portable routers	1.54
Drill Tools		
Quick-Change Adaptors		2.1
Adaptors		2.2
Quick-Change Adaptors	JSOFIX	2.3
Quick-Change Adaptors		2.3
Bushings for Twist Drills		2.4
Twist Drills solid TC		2.5
Boring Pins solid TC		2.6
Dowel Drills solid TC	with flat point & sickle-shaped spurs	2.7
Dowel Drills solid TC		2.8
ISODUR Dowel Drills TCT	with flat point & sickle-shaped spurs	2.9
Dowel Drill TCT	without landed flute	2.10
Dowel Drill TCT	without landed flute	2.11
Dowel Drills TCT	with landed flute	2.12
Dowel Drills TCT	with landed flute	2.13
Dowel Drills HS	with landed flute	2.14
Dowel Drills HS		2.14
Dowel Drills TCT	with landed flute	2.15
Through hole Drills TCT		2.16
Through hole Drills TCT		2.17
Dowel Drills TCT	specially ground	2.17
Through hole Drills TCT	with landed flute	2.18
Through hole Drills TCT	with landed flute	2.18
Through hole Drills - Solid TC		2.19
Through hole Drill - Solid TC	Clamex	2.19
Through hole Drills - Solid TC		2.20
ISODUR Through hole Drills TCT		2.21
Dowel Drills TCT	with threaded shank	2.22
Dowel Drills TCT	with threaded shank	2.23
Dowel Drills TCT	internal thread M 10	2.23
Dowel Drills TCT	for Mafell	2.24
Hinge Boring Bits TCT Z2	interchangeable shank design	2.24
Hinge Boring Bits TCT Z2+V2		2.25
ISODUR Hinge Boring Bits TCT		2.26
Hinge Boring Bits TCT Z3+V3		2.27
Hinge Boring Bits TCT Z2+V2		2.27
Hinge Boring Bit Sets TCT Z2+V2	for double-head hinges	2.28
CABINEO Hinge Boring Bit Sets TCT		2.29
Hinge Boring Bits TCT Z2+V2	with threaded shank	2.29
Hinge Boring Bits w. reversible TC		2.30
Cylinder Boring Bits TCT Z2+V2	short design	2.31
Cylinder Boring Bits TCT Z2+V2	long design	2.32
Twist Drills HS		2.33
Twist Drills TCT	with landed flute	2.34
Twist Drills TCT	with landed flute	2.35
Twist Drills HS	with landed flute	2.35
Twist Drills solid TC	with landed flute	2.36
Stockade Drills HS	with landed flute	2.37
Countersink solid TC Z3	interchangeable shank design	2.38
Countersink TCT Z2		2.38
Loose Countersink TCT Z2		2.39
Loose Countersink TCT Z2	for shank clamping	2.39
Loose Countersink HS Z2+V2		2.40
Copying Cutters HS (HSS-E) Z1	for working aluminium or plastics	2.40
Water Slot Cutters HS (HSS-E) Z1		2.41
Counterbores		2.41
PCD Through hole Drills Z1		2.42
PCD Through hole Drills Z2		2.43
PCD Dowel Drills Z2		2.43
PCD Hinge Boring Bits Z2+2		2.44
Counterbores	special production	2.45

Table of Contents

Article		Page
Solid TC Routing Tools for CNC Machines or Stationary Routers		
Profile Cutters solid TC Z2	Clamex	3.1
Router Cutters solid TC Z2		3.1
Copying Cutters solid TC Z1		3.2
Finishing Cutters GIGASPEED solid		3.3
Finishing Cutters solid TC	with alternate shear angle	3.4
Finishing Cutters solid TC		3.5
Roughing Cutters solid TC		3.6
Roughing-Finishing Cutters solid TC		3.7
Drilling Cutters solid TC		3.8
Corner Forming Router Cutters solid		3.9
Lock Case Cutters solid TC		3.9
Router Cutters solid TC Z1		3.10
Coating for solid TC		3.10
End Mill Cutters solid TC Z1	Thermoplastics	3.11
Multi-tooth End Mill cutters solid TC	Thermoplastics	3.12
Ball Nose Cutters solid TC Z1	Thermoplastics	3.12
V-Groove Cutters solid TC Z1	Thermoplastics	3.13
TC Tools for CNC Machines or Stationary Routers		
Router Cutters w. reversible TC tips	w. rev. TC plunge tip	4.1
Router Cutters w. reversible TC tips		4.2
Router Cutters w. reversible TC tips	back screw fixing	4.2
Router Cutters w. reversible TC tips		4.3
Router Cutters w. reversible TC tips		4.3
Router Cutters w. reversible TC tips		4.4
Router Cutters w. reversible TC tips		4.4
Router Cutter w. reversible TC tips	with rev. TC plunge tip	4.5
Router Cutters w. interch. TC tips Z1	w. TCT plunge tip	4.5
Router Cutter w. interch. TC tips Z2	w. TCT plunge tip	4.6
Router Cutters w. reversible TC tips	w. rev. TC plunge tip	4.7
Router Cutters w. reversible TC tips		4.8
Roughing Cutter w. reversible TC		4.8
Roughing Cutters w. reversible TC		4.9
FOURCUT Roughing Cutters TC Z2	GBM	4.10
Spiral Router Cutters w. reversible		4.11
Dovetail cutters w. interchangeable		4.12
Dovetail cutters w. interchangeable		4.13
NOVITEC Roughing Cutters	with interch. TC cutting pins GBM	4.14
Helical Cutterhead w. rev. TC tips		4.15
Helical Cutterhead w. rev. TC tips		4.16
Jointing/Rebating Cutterheads w.		4.17
Grooving/Surfacing Cutters w. rev.		4.18
Jointing/Rebating Cutter w. rev. TC		4.19
Surfacing Cutter w. rev. TC tips Z3		4.19
4Cut-Surfacing Cutters w. rev. TC		4.20
Adjustable Grooving Cutters w. rev.		4.21
Grooving Cutters w. rev. TC tips		4.22
Lock Case Cutters w.	GBM	4.23
Vari-Angle Cutterheads w. rev. TC		4.24
Bevel Cutter w. rev. TC tips Z2		4.25
Bevel/Folding Cutter w. reversible		4.26
Corner Forming Cutter w. reversible		4.27
Corner Notching Cutter w. reversible		4.27
Decorative Groove Cutter w.		4.28
Decorative Groove Cutter w.		4.29
Rounding Over/Bevelling Cutter TC	w. interchangeable tips	4.30
Rounding Over/Bevelling Cutter TC	w. interchangeable tips	4.31
Rounding Over/Bevelling Set Z2	w. reversible/interchangeable tips	4.32
Rounding Over/Bevelling Set Spare	contenuation	4.33
Cutters w. interch. TC knives for free	overview	4.34
Cutters w. interch. TC knives for free	overview	4.35
Universal Profile Cutter for		4.36
RAPIDO Bottom Cutting Profiler for		4.37
RAPIDO Bottom Cutting Profiler for		4.38
RAPIDO Bottom Cutting Profiler Z2	for double profiles	4.39
RAPIDO Bottom Cutting Profiler for		4.40
RAPIDO Profile Cutter for TC knives		4.41
RAPIDO Profile Cutters for TC knives		4.42
RAPIDO Profile Cutters for TC knives	back screw fixing	4.43
RAPIDO Profile Cutter for TC knives		4.44
RAPIDO Profile Cutters for TC knives		4.45
RAPIDO Profile Cutter for TC knives		4.46

Article		Page
RAPIDO Profile Cutter for TC knives		4.47
RAPIDO Profile Cutters for TC knives		4.48
RAPIDO Profile Cutter for TC knives		4.49
RAPIDO Profile Cutter for TC knives		4.50
RAPIDO Raised Panel Cutter for TC		4.51
RAPIDO Glue Joint Cutters with TC		4.52
Handrail Cutter w. interch. TC knives		4.53
Multi-Profile Cutterhead for TC		4.54
Multi-Profile Cutterhead for TC		4.55
Angled Multi-Profiler for TC knives		4.56
Bottom Cutting Multi-Profiler for TC		4.57
Circular Saw Blades TCT	for CNC machines	4.58
Grooving Saw Blades TCT Z6 / Z12		4.59
Router Cutter TC / TCT Z1	for eccentric use	4.59
Aperture Cutter TCT Z2	with TC plunge tip	4.60
PCD Tools for CNC Machines or Stationary Routers		
Selection Guide PCD Router Cutters		5.1
Diastart-UNO	Z1+1	5.2
Diastart-DUO	Z2	5.3
Dianova		5.4
Dianova-UNO	Z1	5.5
Dianova-PLUS	Z2	5.5
Dianorm	Z1+1	5.6
Dianorm-DUO	Z2	5.7
Dianorm-TRIO	Z3	5.8
Diatec-DUO	Z2	5.9
Diatec-TRIO Finishing cutters	Z3	5.10
Diatec-TRIO Roughing cutters	Z3	5.11
Diatec	Z2+2	5.12
Diatec-PRO DUO	Z2+2	5.12
Diatec-PRO TRIO	Z3+3	5.13
Diatec-WOOD	Z2+2	5.13
Diamatic-DUO	Z2	5.14
Diamatic	Z3	5.15
Diamatic-PLUS	Z3	5.16
Diamatic	Z3	5.17
Diamatic-TRIO	Z3	5.18
Diamatic-QUATTRO	Z4	5.19
Megaspeed	Z4+2+4	5.20
Gigaspeed-UNO	Z1	5.21
Gigaspeed-DUO	Z2	5.22
Gigaspeed-TRIO	Z3	5.23
Gigaspeed-PARTICLE	Z3	5.23
4Cut-PCD-Roughing Cutters	Z2	5.24
4Cut-PCD-Surfacing Cutters		5.25
PCD V-Groove / Engraving Cutter	Z1	5.26
PCD V-Groove / Bevelling Cutters	Z2	5.26
PCD Edge Rounding Cutters		5.27
4CUT-PCD-Decorative Groove Cutter	Z1	5.27
PCD Grooving Cutter	Z3	5.28
PCD Profile Cutter	Z2+1	5.28
PCD Grooving Cutter	Z3	5.29
PCD Grooving Saw Blades	Z6	5.29
Dianova Jointing Cutters		5.30
PCD Router Cutters	special production	5.31
Clamping Tools for CNC Machines		
Universal CNC Drilling Chucks		6.1
Collet Chucks	with hollow taper shank (HSK)	6.2
PREZISO Collet Chuck	with hollow taper shank (HSK)	6.3
THERMOTEC Heat Shrinking Chucks	w. hollow taper shank (HSK)	6.4
Hydraulic Clamping Chucks	with hollow taper shank (HSK)	6.5
Clamping Flange for Saw Blades	with hollow taper shank (HSK)	6.6
Clamping Flanges for Saw Blades	with hollow taper shank (HSK)	6.7
Arbors	with hollow taper shank (HSK)	6.8
Arbors	HSK 85 W	6.9
Collet Chucks with steep taper	SK 30	6.10
Spindle Taper Wiper		6.10
Collet Chuck	parallel shank	6.11
Collet Chuck	parallel shank	6.11
Arbors	parallel shank	6.12
Arbors	parallel shank	6.13

Table of Contents

Article	
Adaptors	parallel shank
Precision Collets	closure range 0,5 mm
Precision Collets	closure range 0,5 mm
Precision Collets	closure range 1,0 mm
Precision Collets	closure range 1,0 mm
Precision Collet Sets	
PREZISO Turbine	
Dust and Chip Extraction Turbine	
PREZISO Innovation package	
Assembling device	for clamping chucks and arbors
Assembling Devices	for collet chucks, arbors and
Assembling Devices	for collet chucks and arbors
DIGITEC-Measuring System	to suit assembling device No. 211
Pull Studs, Spare parts	
Intermediate sleeves	

Spare Parts, Accessories, Modification Cost

Reversible TC tips TH4,1 / 5,5	
Reversible TC tips TH6 / 7	
Reversible TC tips TH9	
Reversible / interchangeable PCD	
Reversible TC tips TH10,5 / 12	
Reversible TC tips TH9,8 / 12	
Reversible TC tips TH9 / 12	with bevel
Reversible TC tips special forms	
Reversible TC tips special forms	continuation
Reversible profile tips TC	UNITEC
Rerversible profile tips TC	decorative groove
Reversible rounding over tips TC	
Interchangable Rounding over /	
Interchangeable Rounding over /	
Interchangeable Profile tips TC	Glue joint profiles
Interchangeable TC knives	RAPIDO
Interchangeable TC knives	RAPIDO
Interchangeable TC knives	RAPIDO
Interchangeable TC knives	for LEUCO-Super-Profiler
Interchangeable TC knives	for Multi-Profilers with support plat
Interchangeable TC pins and tips	for Novitec
Interchangeable TC plunge tips	
Edge bevelling/rounding knives TC	
Novitec Grinding Device	
Keys	TORX
Keys	

Alphabetical index

Article		Page
4CUT-PCD-Decorative Groove Cutter	Z1	5.27
4Cut-PCD-Roughing Cutters	Z2	5.24
4Cut-PCD-Surfacing Cutters		5.25
4Cut-Surfacing Cutters w. rev. TC		4.20
Adaptors		2.2
Adaptors	parallel shank	6.13
Adjustable Grooving Cutters w. rev.		4.21
Allen Screws		7.20
Angled Multi-Profiler for TC knives		4.56
Aperture Cutter TCT Z2	with TC plunge tip	4.60
Arbors	with spacers	1.31
Arbors	with ball bearing guide	1.31
Arbors	interchangeable shank design	1.32
Arbors	with ball bearing guide	1.33
Arbors	with hollow taper shank (HSK)	6.8
Arbors	HSK 85 W	6.9
Arbors	parallel shank	6.12
Arbors	parallel shank	6.13
Assembling device	for clamping chucks and arbors	6.19
Assembling Devices	for collet chucks, arbors and	6.20
Assembling Devices	for collet chucks and arbors	6.21
Ball bearings / Guide rings		7.28
Ball Grooving Cutters TCT Z2		1.47
Ball Nose Cutters solid TC Z1	Thermoplastics	3.12
Bevel/Folding Cutter w. reversible		4.26
Bevel Cutters TCT Z2		1.15
Bevel Cutters TCT Z2	with ball bearing guide	1.16
Bevel Cutters TCT Z2		1.17
Bevel Cutter TCT Z2	Corian / Varicor	1.17
Bevel Cutter w. rev. TC tips Z2		4.25
Bevel Trimming Cutters TCT Z2		1.16
Bevel Trimming Cutters w. rev. TC		1.24
Bevel Trimming Cutter TCT Z3		1.18
Biscuit Slotting Cutter Set TCT Z2		1.29
Boring Pins solid TC		2.6
Bottom Cutting Multi-Profiler for TC		4.57
Bushings for Twist Drills		2.4
CABINEO Hinge Boring Bit Sets TCT		2.29
Circular Saw Blades TCT	for CNC machines	4.58
Clamping body set 3-parts		7.25
Clamping Flange for Saw Blades	with hollow taper shank (HSK)	6.6
Clamping Flanges for Saw Blades	with hollow taper shank (HSK)	6.7
Clamping wedges		7.24
Classical Cutters TCT Z2	interchangeable shank design	1.50
Coating for solid TC		3.10
Collet Chuck	parallel shank	6.11
Collet Chuck	parallel shank	6.11
Collet Chucks		1.52
Collet Chucks	with hollow taper shank (HSK)	6.2
Collet Chucks with steep taper	SK 30	6.10
Copying Cutters HS (HSS-E) Z1	for working aluminium or plastics	2.40
Copying Cutters solid TC Z1		3.2
Core Box Cutters TCT Z2	one-piece design	1.33
Core Box Cutters TCT Z2	interchangeable shank design	1.34
Core Box Cutters w.rev. TC tip Z1	with circular tip	1.35
Core Box Cutter TCT Z2	one-piece design	1.35
Corner Forming Cutter w. reversible		4.27
Corner Forming Router Cutters solid		3.9
Corner Notching Cutter w. reversible		4.27
Counterbores		2.41
Counterbores	special production	2.45
Countersink solid TC Z3	interchangeable shank design	2.38
Countersink TCT Z2		2.38
Cove Cutters TCT Z2	interchangeable shank design	1.36
C-Spanners / Engineers´wrench		7.18
Cutters w. interch. TC knives for free	overview	4.34
Cutters w. interch. TC knives for free	overview	4.35
Cylinder Boring Bits TCT Z2+V2	short design	2.31
Cylinder Boring Bits TCT Z2+V2	long design	2.32
Decorative Groove Cutter w.		4.28
Decorative Groove Cutter w.		4.29
Decorative Groove Cutter w.		1.14
DIAFORM-PCD Router Cutters Z2	for portable routers	1.54
Diamatic	Z3	5.15
Diamatic	Z3	5.17

Article		Page
Diamatic-DUO	Z2	5.14
Diamatic-PLUS	Z3	5.16
Diamatic-QUATTRO	Z4	5.19
Diamatic-TRIO	Z3	5.18
Dianorm	Z1+1	5.6
Dianorm-DUO	Z2	5.7
Dianorm-TRIO	Z3	5.8
Dianova		5.4
Dianova Jointing Cutters		5.30
Dianova-PLUS	Z2	5.5
Dianova-UNO	Z1	5.5
Diastart-DUO	Z2	5.3
Diastart-UNO	Z1+1	5.2
Diatec	Z2+2	5.12
Diatec-DUO	Z2	5.9
Diatec-PRO DUO	Z2+2	5.12
Diatec-PRO TRIO	Z3+3	5.13
Diatec-TRIO Finishing cutters	Z3	5.10
Diatec-TRIO Roughing cutters	Z3	5.11
Diatec-WOOD	Z2+2	5.13
DIGITEC-Measuring System	to suit assembling device No. 21172	6.22
Distance spacers		7.25
Double Edge Trimming Cutters w.		1.20
Double Radius Cutter TCT Z4+4	Corian / Varicor	1.44
Dovetail Cutters TCT Z2		1.10
Dovetail cutters w. interchangeable		4.12
Dovetail cutters w. interchangeable		4.13
Dovetail Cutter with reversible TC		1.9
Dowel Drills HS	with landed flute	2.14
Dowel Drills HS		2.14
Dowel Drills solid TC	with flat point & sickle-shaped spurs	2.7
Dowel Drills solid TC		2.8
Dowel Drills TCT	with landed flute	2.12
Dowel Drills TCT	with landed flute	2.13
Dowel Drills TCT	with landed flute	2.15
Dowel Drills TCT	specially ground	2.17
Dowel Drills TCT	with threaded shank	2.22
Dowel Drills TCT	with threaded shank	2.23
Dowel Drills TCT	internal thread M 10	2.23
Dowel Drills TCT	for Mafell	2.24
Dowel Drill TCT	without landed flute	2.10
Dowel Drill TCT	without landed flute	2.11
Drilling Cutters solid TC		3.8
Dust and Chip Extraction Turbine		6.18
Edge bevelling/rounding knives TC		7.16
End Mill Cutters solid TC Z1	Thermoplastics	3.11
Finger Pull Cutters TCT Z2		1.47
Finishing Cutters GIGASPEED solid		3.3
Finishing Cutters solid TC	with alternate shear angle	3.4
Finishing Cutters solid TC		3.5
FOURCUT Roughing Cutters TC Z2	GBM	4.10
Gigaspeed-DUO	Z2	5.22
Gigaspeed-PARTICLE	Z3	5.23
Gigaspeed-TRIO	Z3	5.23
Gigaspeed-UNO	Z1	5.21
Grooving/Face Plate Cutters w.rev.		1.8
Grooving/Surfacing Cutters w. rev.		4.18
Grooving Cutters TCT Z2	with TCT plunge tip	1.2
Grooving Cutters TCT Z2	with TCT plunge tip	1.3
Grooving Cutters TCT Z2	with TCT plunge tip	1.4
Grooving Cutters w. rev. TC tips		4.22
Grooving Cutters with reversible TC		1.7
Grooving Cutters with reversible TC		1.9
Grooving Cutters with reversible TC		1.5
Grooving Cutters with reversible TC		1.6
Grooving Cutter TCT Z2		1.1
Grooving Saw Blades TCT Z6 / Z12		4.59
Grooving Saws TCT Z2		1.30
Handrail Cutter w. interch. TC knives		4.53
Helical Cutterhead w. rev. TC tips		4.15
Helical Cutterhead w. rev. TC tips		4.16
Hinge Boring Bit Sets TCT Z2+V2	for double-head hinges	2.28
Hinge Boring Bits TCT Z2	interchangeable shank design	2.24
Hinge Boring Bits TCT Z2+V2		2.25
Hinge Boring Bits TCT Z2+V2		2.27

Alphabetical index

Article		Page
Hinge Boring Bits TCT Z2+V2	with threaded shank	2.29
Hinge Boring Bits TCT Z3+V3		2.27
Hinge Boring Bits w. reversible TC		2.30
Hydraulic Clamping Chucks	with hollow taper shank (HSK)	6.5
Inlay Trimming Cutter w. rev. TC tips	Corian / Varicor	1.23
Interchangable Rounding over /		7.9
Interchangeable Profile tips TC	Glue joint profiles	7.10
Interchangeable Rounding over /		7.10
Interchangeable Shanks		1.53
Interchangeable TC knives	RAPIDO	7.11
Interchangeable TC knives	RAPIDO	7.12
Interchangeable TC knives	RAPIDO	7.13
Interchangeable TC knives	for LEUCO-Super-Profiler	7.13
Interchangeable TC knives	for Multi-Profilers with support plates	7.14
Interchangeable TC pins and tips	for Novitec	7.15
Interchangeable TC plunge tips		7.15
Intermediate sleeves		6.24
ISODUR Dowel Drills TCT	with flat point & sickle-shaped spurs	2.9
ISODUR Hinge Boring Bits TCT		2.26
ISODUR Through hole Drills TCT		2.21
Jointing/Rebating Cutterheads w.		4.17
Jointing/Rebating Cutter w. rev. TC		4.19
Keys	TORX	7.17
Keys		7.17
Laminate Floor Slotting Cutter Sets		1.28
Lock Case Cutters solid TC		3.9
Lock Case Cutters w.	GBM	4.23
Loose Countersink HS Z2+V2		2.40
Loose Countersink TCT Z2		2.39
Loose Countersink TCT Z2	for shank clamping	2.39
Megaspeed	Z4+2+4	5.20
Multi-Profile Cutterhead for TC		4.54
Multi-Profile Cutterhead for TC		4.55
Multi-tooth End Mill cutters solid TC	Thermoplastics	3.12
Novitec Grinding Device		7.16
NOVITEC Roughing Cutters	with interch. TC cutting pins GBM	4.14
Overlay Timming Cutter TCT Z2	Corian / Varicor	1.45
Overlay Trimming Cutter TCT Z2	Corian / Varicor	1.45
Ovolo Cutters TCT Z2	interchangeable shank design	1.36
Ovolo Cutters TCT Z2	interchangeable shank design	1.37
Ovolo Cutters TCT Z2	interchangeable shank design	1.38
Ovolo Cutters TCT Z2	one-piece design	1.40
Panel Pilot Cutters TCT Z1		1.10
Panel Pilot Cutters TCT Z1+1		1.11
PCD Dowel Drills Z2		2.43
PCD Edge Rounding Cutters		5.27
PCD Grooving Cutter	Z3	5.28
PCD Grooving Cutter	Z3	5.29
PCD Grooving Saw Blades	Z6	5.29
PCD Hinge Boring Bits Z2+2		2.44
PCD Profile Cutter	Z2+1	5.28
PCD Router Cutters	special production	5.31
PCD Through hole Drills Z1		2.42
PCD Through hole Drills Z2		2.43
PCD V-Groove / Bevelling Cutters	Z2	5.26
PCD V-Groove / Engraving Cutter	Z1	5.26
Precision Collets	closure range 0,5 mm	6.14
Precision Collets	closure range 0,5 mm	6.15
Precision Collets	closure range 1,0 mm	6.15
Precision Collets	closure range 1,0 mm	6.16
Precision Collet Sets		6.16
PREZISO Collet Chuck	with hollow taper shank (HSK)	6.3
PREZISO Innovation package		6.19
PREZISO Turbine		6.17
Profile Cutters for Arched Windows		1.44
Profile Cutters solid TC Z2	Clamex	3.1
Profile Cutter TCT Z2	Corian / Varicor	1.46
Profile Cutter TCT Z2		1.46
Pull Studs, Spare parts		6.23
Quick-Change Adaptors		2.1
Quick-Change Adaptors	JSOFIX	2.3
Quick-Change Adaptors		2.3
Raised Panel Cutter TCT Z2		1.51
RAPIDO Bottom Cutting Profiler for		4.37
RAPIDO Bottom Cutting Profiler for		4.38

Article		Page
RAPIDO Bottom Cutting Profiler for		4.40
RAPIDO Bottom Cutting Profiler Z2	for double profiles	4.39
RAPIDO Glue Joint Cutters with TC		4.52
RAPIDO Profile Cutter for TC knives		4.41
RAPIDO Profile Cutter for TC knives		4.44
RAPIDO Profile Cutter for TC knives		4.46
RAPIDO Profile Cutter for TC knives		4.47
RAPIDO Profile Cutter for TC knives		4.49
RAPIDO Profile Cutter for TC knives		4.50
RAPIDO Profile Cutters for TC knives		4.42
RAPIDO Profile Cutters for TC knives	back screw fixing	4.43
RAPIDO Profile Cutters for TC knives		4.45
RAPIDO Profile Cutters for TC knives		4.48
RAPIDO Raised Panel Cutter for TC		4.51
Rebating/Surfacing Cutter with rev.		1.26
Rebating Cutters TCT Z2	interchangeable shank design	1.25
Reduction pieces		1.52
Rerversible profile tips TC	decorative groove	7.8
Reversible / interchangeable PCD		7.2
Reversible profile tips TC	UNITEC	7.7
Reversible rounding over tips TC		7.8
Reversible TC tips special forms		7.5
Reversible TC tips special forms	continuation	7.6
Reversible TC tips TH10,5 / 12		7.3
Reversible TC tips TH4,1 / 5,5		7.1
Reversible TC tips TH6 / 7		7.1
Reversible TC tips TH9		7.2
Reversible TC tips TH9,8 / 12		7.4
Reversible TC tips TH9 / 12	with bevel	7.5
Roman Ogee Cutters TCT Z2	interchangeable shank design	1.50
Roman Ogee Cutter TCT Z2	interchangeable shank design	1.48
Roughing Cutters solid TC		3.6
Roughing Cutters w. reversible TC		4.9
Roughing Cutter w. reversible TC		4.8
Roughing-Finishing Cutters solid TC		3.7
Rounding Over/Bevelling Cutter TC	w. interchangeable tips	4.31
Rounding Over/Bevelling Cutter TC	w. interchangeable tips	4.30
Rounding Over/Bevelling Set Spare	contenuation	4.33
Rounding Over/Bevelling Set Z2	w. reversible/interchangeable tips	4.32
Rounding Over Cutters TCT Z2	interchangeable shank design	1.39
Rounding Over Cutters TCT Z2	one-piece design	1.40
Rounding Over Cutters TCT Z2	for portable edge rounding machines	1.41
Rounding Over Cutters w. rev. TC		1.41
Router Cutters solid TC Z1		3.10
Router Cutters solid TC Z2		3.1
Router Cutters w. interch. TC tips Z1	w. TCT plunge tip	4.5
Router Cutters w. reversible TC tips	w. rev. TC plunge tip	4.1
Router Cutters w. reversible TC tips		4.4
Router Cutters w. reversible TC tips		4.2
Router Cutters w. reversible TC tips	back screw fixing	4.2
Router Cutters w. reversible TC tips		4.3
Router Cutters w. reversible TC tips		4.3
Router Cutters w. reversible TC tips		4.4
Router Cutters w. reversible TC tips	w. rev. TC plunge tip	4.7
Router Cutters w. reversible TC tips		4.8
Router Cutter TC / TCT Z1	for eccentric use	4.59
Router Cutter w. interch. TC tips Z2	w. TCT plunge tip	4.6
Router Cutter w. reversible TC tips	with rev. TC plunge tip	4.5
Screws	with hexagon	7.21
Screws	slotted and Torx	7.21
Screws	TORX	7.22
Screws, Nuts		7.23
Selection Guide PCD Router Cutters		5.1
Services	for shank-type tools	7.29
Services	for shank-type tools	7.30
Services	for shank-type tools and tools with	7.31
Services	for shank-type tools and tools with	7.32
Slot Bits TCT	for FESTO - DOMINO	1.28
Slotted Bushings		1.53
Spacer Set	for No. 64410 - 418	7.27
Spacer sets		7.27
Spindle Taper Wiper		6.10
Spiral Router Cutters w. reversible		4.11
Square Trimming Cutters TCT Z2		1.18
Square Trimming Cutters w. rev. TC		1.21

Alphabetical index

Article		Page
Square Trimming Cutters w. rev. TC		1.22
Standard Spacers		7.26
Stepped Cutters for closure fittings		1.27
Stockade Drills HS	with landed flute	2.37
Sunk Bead Cutters TCT Z2	interchangeable shank design	1.51
Surfacing Cutter w. rev. TC tips Z3		4.19
Symbols and Abbreviations		7.33
Template costs	for profile knives and back supports	7.32
THERMOTEC Heat Shrinking Chucks	w. hollow taper shank (HSK)	6.4
Through hole Drill - Solid TC	Clamex	2.19
Through hole Drills - Solid TC		2.19
Through hole Drills - Solid TC		2.20
Through hole Drills TCT		2.16
Through hole Drills TCT		2.17
Through hole Drills TCT	with landed flute	2.18
Through hole Drills TCT	with landed flute	2.18
Torque Spanners		7.19
Trimming and Copying Cutters TCT	interch. shank design	1.19
Trimming and Copying Cutters w.		1.21
Trimming and Surfacing Cutters TCT		1.26
Trimming and Surfacing CuttersTCT	Corian / Varicor	1.27
Trimming Cutters w. rev. TC tips Z2		1.23
Twist Drills HS		2.33
Twist Drills HS	with landed flute	2.35
Twist Drills solid TC		2.5
Twist Drills solid TC	with landed flute	2.36
Twist Drills TCT	with landed flute	2.34
Twist Drills TCT	with landed flute	2.35
UNITEC Profile Cutters TC Z2	interchangeable shank design	1.49
UNITEC Rebating Cutters w. rev. TC		1.24
UNITEC Rounding Over / Ovolo		1.42
UNITEC Rounding Over / Ovolo	continuation	1.43
Universal CNC Drilling Chucks		6.1
Universal Profile Cutter for		4.36
Vari-Angle Cutterheads w. rev. TC		4.24
V-Groove Cutters solid TC Z1	Thermoplastics	3.13
V-Grooving/Bevelling Cutters TCT Z1	interch. shank design	1.13
V-Grooving/Engraving Cutters TCT		1.13
V-Grooving/Engraving Cutters TC Z3	interch. shank design	1.12
V-Grooving/Engraving Cutters TC Z3	interch. shank design	1.12
Water Channel Cutters TCT Z2	Corian / Varicor	1.34
Water Slot Cutters HS (HSS-E) Z1		2.41
Weatherstrip Cutter Sets TCT Z2		1.29
Weatherstrip Cutters TC Z2		1.11

Index by Part-Nos.

Article		Page
11000	DIAFORM-PCD Router Cutters Z2	1.54
12100	Diastart-UNO	5.2
12200	Diastart-DUO	5.3
12500	Dianova	5.4
12550	Dianova-UNO	5.5
12660	Dianova-PLUS	5.5
13510	Dianorm	5.6
13700	Dianorm-DUO	5.7
13701	Dianorm-DUO	5.7
13750	Dianorm-TRIO	5.8
14250	Diatec-DUO	5.9
14253	Diatec-TRIO Finishing cutters	5.10
14256	Diatec-TRIO Roughing cutters	5.11
14300	Diatec	5.12
14310	Diatec-PRO DUO	5.12
14330	Diatec-PRO TRIO	5.13
15530	Diatec-WOOD	5.13
15540	Diamatic-DUO	5.14
15551	Diamatic	5.15
15552	Diamatic-PLUS	5.16
15553	Diamatic	5.17
15555	Diamatic-TRIO	5.18
15556	Diamatic-QUATTRO	5.19
15600	Megaspeed	5.20
15700	Gigaspeed-UNO	5.21
15700	Gigaspeed-DUO	5.22
15700	Gigaspeed-TRIO	5.23
15750	Gigaspeed-PARTICLE	5.23
16010	PCD V-Groove / Engraving Cutter	5.26
16010	PCD V-Groove / Bevelling Cutters	5.26
16020	PCD Router Cutters	5.31
16020-9	PCD Grooving Cutter	5.28
16020-9	PCD Profile Cutter	5.28
16030	PCD Edge Rounding Cutters	5.27
16030	PCD Edge Rounding Cutters	5.27
16035	PCD Router Cutters	5.31
17030	4Cut-PCD-Roughing Cutters	5.24
17525	4Cut-PCD-Surfacing Cutters	5.25
17525	4Cut-PCD-Surfacing Cutters	5.25
17600	4CUT-PCD-Decorative Groove Cutter	5.27
20005	Boring Pins solid TC	2.6
20038-6	Router Cutters solid TC Z1	3.10
20046	Router Cutter TC / TCT Z1	4.59
20200-5 / 24246-5 / 24796-5	Grooving Cutters TCT Z2	1.3
20200-6	Router Cutters solid TC Z2	3.1
20240	Aperture Cutter TCT Z2	4.60
20247	Corner Forming Router Cutters solid	3.9
20250-6	Finishing Cutters GIGASPEED solid TC	3.3
20252	Finishing Cutters solid TC	3.4
20253	Finishing Cutters solid TC	3.4
20254	Lock Case Cutters solid TC	3.9
20255 / 20256	Roughing Cutters solid TC	3.6
20257 / 20258	Finishing Cutters solid TC	3.5
20259	Roughing-Finishing Cutters solid TC	3.7
20260 / 20261	Finishing Cutters solid TC	3.5
20262	Finishing Cutters solid TC	3.5
20264 / 20265	Roughing Cutters solid TC	3.6
20267	Roughing Cutters solid TC	3.6
20268	Drilling Cutters solid TC	3.8
20269	Drilling Cutters solid TC	3.8
20290	Spiral Router Cutters w. reversible TC	4.11
20300	NOVITEC Roughing Cutters	4.14
20330	FOURCUT Roughing Cutters TC Z2	4.10
20525	4Cut-Surfacing Cutters w. rev. TC tips	4.20
20525	4Cut-Surfacing Cutters w. rev. TC tips	4.20
20535-6	Profile Cutters solid TC Z2	3.1
21016	Hydraulic Clamping Chucks	6.5
21017	PREZISO Collet Chuck	6.3
21017-0	PREZISO Innovation package	6.19
21022	THERMOTEC Heat Shrinking Chucks	6.4
21022	THERMOTEC Heat Shrinking Chucks	6.4
21026	Intermediate sleeves	6.24
21030	Universal CNC Drilling Chucks	6.1
21038	Collet Chucks	6.2
21038	Collet Chucks	6.2

Article		Page
21042	Collet Chucks with steep taper	6.10
21044	Collet Chuck	6.11
21044	Collet Chuck	6.11
21046	Precision Collets	6.14
21048	Precision Collets	6.14
21048 - 21054	Precision Collet Sets	6.16
21049	Precision Collets	6.15
21053 / 21054	Precision Collets	6.15
21055 - 21057	Precision Collets	6.16
21079	Arbors	6.12
21080	Arbors	6.13
21086	Arbors	6.8
21090	Arbors	6.9
21160	Novitec Grinding Device	7.16
21162	Assembling device	6.19
21172	Assembling Devices	6.20
21172	Assembling Devices	6.21
21175	DIGITEC-Measuring System	6.22
21190	Spindle Taper Wiper	6.10
21250 - 21280	Adaptors	2.2
21290 - 21296	Quick-Change Adaptors	2.3
21300	Quick-Change Adaptors	2.1
21312-21340	Quick-Change Adaptors	2.1
21480	Quick-Change Adaptors	2.3
22005	Router Cutters w. reversible TC tips	4.2
22006	Router Cutters w. reversible TC tips	4.3
22007	Router Cutters w. reversible TC tips	4.4
22008	Router Cutters w. reversible TC tips	4.4
22010 / 22020	Router Cutters w. reversible TC tips	4.8
22022	Router Cutter w. reversible TC tips Z2	4.5
22023	Router Cutters w. interch. TC tips Z1	4.5
22024	Router Cutter w. interch. TC tips Z2	4.6
22026	Roughing Cutter w. reversible TC tips	4.8
22027	Roughing Cutters w. reversible TC	4.9
22029	Router Cutters w. reversible TC tips	4.7
22030	Grooving Cutters with reversible TC	1.9
22030	Router Cutters w. reversible TC tips	4.3
22035	Router Cutters w. reversible TC tips	4.2
22045	Grooving/Surfacing Cutters w. rev. TC	4.18
22060	Jointing/Rebating Cutter w. rev. TC	4.19
22095	Vari-Angle Cutterheads w. rev. TC	4.24
22110	UNITEC Rebating Cutters w. rev. TC	1.24
22140	UNITEC Rounding Over / Ovolo	1.42
22140	UNITEC Rounding Over / Ovolo	1.43
22150	UNITEC Profile Cutters TC Z2	1.49
22160	Rounding Over/Bevelling Cutter TC	4.30
22170	Bevel Cutter w. rev. TC tips Z2	4.25
22180	Corner Forming Cutter w. reversible	4.27
22180-5	Bevel/Folding Cutter w. reversible TC	4.26
22193	Decorative Groove Cutter w.	1.14
22195	Decorative Groove Cutter w.	4.28
22195 - 22547	Cutters w. interch. TC knives for free	4.35
22196	Decorative Groove Cutter w.	4.29
22200	Square Trimming Cutters w. rev. TC	1.22
22210	Trimming Cutters w. rev. TC tips Z2	1.23
22220	Square Trimming Cutters w. rev. TC	1.21
22226	Inlay Trimming Cutter w. rev. TC tips	1.23
22230	Trimming Cutters w. rev. TC tips Z2	1.23
22240	Bevel Trimming Cutters w. rev. TC	1.24
22240-5	Rounding Over Cutters w. rev. TC tips	1.41
22250	Rebating/Surfacing Cutter with rev.	1.26
22270	Trimming and Copying Cutters w.	1.21
22280	Core Box Cutters w.rev. TC tip Z1	1.35
22293	Double Edge Trimming Cutters w.rev.	1.20
22293-03	Double Edge Trimming Cutters w.rev.	1.20
22310	Lock Case Cutters w. interchangeable	4.23
22320	Grooving/Face Plate Cutters w.rev.	1.8
22340	Grooving Cutters with reversible TC	1.6
22350	Grooving Cutters with reversible TC	1.5
22360	Router Cutters w. reversible TC tips	4.1
22363 - 22368	Grooving Cutters with reversible TC	1.7
22438	RAPIDO Raised Panel Cutter for TC	4.51
22440	RAPIDO Profile Cutter for TC knives	4.49
22442	RAPIDO Profile Cutter for TC knives	4.50
22451	Universal Profile Cutter for reversible	4.36

Index by Part-Nos.

Article		Page
22460	Angled Multi-Profiler for TC knives Z2	4.56
22470	Bottom Cutting Multi-Profiler for TC	4.57
22480	Multi-Profile Cutterhead for TC knives	4.54
22485	Multi-Profile Cutterhead for TC knives	4.55
22510	Rounding Over/Bevelling Cutter TC	4.31
22525	Surfacing Cutter w. rev. TC tips Z3	4.19
22529	RAPIDO Profile Cutter for TC knives	4.41
22529 - 22542	Cutters w. interch. TC knives for free	4.34
22530	RAPIDO Profile Cutters for TC knives	4.42
22530-90	RAPIDO Profile Cutter for TC knives	4.44
22530-97	RAPIDO Profile Cutters for TC knives	4.48
22532	RAPIDO Profile Cutters for TC knives	4.43
22534	RAPIDO Profile Cutters for TC knives	4.43
22537	RAPIDO Profile Cutter for TC knives	4.47
22538-30	RAPIDO Profile Cutter for TC knives	4.46
22538-45	RAPIDO Profile Cutters for TC knives	4.45
22542	RAPIDO Profile Cutters for TC knives	4.48
22543	RAPIDO Bottom Cutting Profiler for TC	4.37
22545	RAPIDO Bottom Cutting Profiler for TC	4.38
22546	RAPIDO Bottom Cutting Profiler Z2	4.39
22547	RAPIDO Bottom Cutting Profiler for TC	4.40
22560	RAPIDO Glue Joint Cutters with TC	4.52
22565	Handrail Cutter w. interch. TC knives	4.53
22605	Hinge Boring Bits w. reversible TC	2.30
22726	Dovetail Cutter with reversible TC	1.9
22730	Dovetail cutters w. interchangeable	4.12
22730	Dovetail cutters w. interchangeable	4.13
24050	Square Trimming Cutters TCT Z2	1.18
24060	Trimming and Copying Cutters TCT	1.19
24100	Bevel Cutters TCT Z2	1.16
24106-5	Bevel Cutters TCT Z2	1.15
24123 / 24133	Profile Cutters for Arched Windows	1.44
24150-36	Grooving Saws TCT Z2	1.30
24150-40	Grooving Saws TCT Z2	1.30
24150-50	Grooving Saws TCT Z2	1.30
24160	Arbors	1.31
24170	Arbors	1.33
24190	Arbors	1.32
24220	Weatherstrip Cutters TC Z2	1.11
24220-5	Grooving Cutter TCT Z2	1.1
24235-5	Grooving Cutters TCT Z2	1.3
24240-5	Grooving Cutters TCT Z2	1.2
24260-40	V-Grooving/Bevelling Cutters TCT Z1	1.13
24260-5	V-Grooving/Engraving Cutters TCT Z2	1.13
24280	Bevel Trimming Cutters TCT Z2	1.16
24290	Bevel Cutters TCT Z2	1.17
24320-5	Dovetail Cutters TCT Z2	1.10
24320-5	Dovetail Cutters TCT Z2	1.10
24340-5	Core Box Cutters TCT Z2	1.33
24360-5	Rounding Over Cutters TCT Z2	1.41
24370-5	Ovolo Cutters TCT Z2	1.40
24380-5	Rounding Over Cutters TCT Z2	1.40
24410-5	Panel Pilot Cutters TCT Z1	1.10
24420-5	Panel Pilot Cutters TCT Z1+1	1.11
24440	Arbors	1.31
24460-5	Bevel Trimming Cutter TCT Z3	1.18
24470	Roman Ogee Cutter TCT Z2	1.48
24510	Trimming and Surfacing Cutters TCT	1.26
24520-5	Rebating Cutters TCT Z2	1.25
24530-5	Rebating Cutters TCT Z2	1.25
24540-5	V-Grooving/Engraving Cutters TC Z3	1.12
24540-6	V-Grooving/Engraving Cutters TC Z3	1.12
24550-5	Bevel Cutters TCT Z2	1.15
24560-5	Bevel Cutters TCT Z2	1.15
24570-5	Cove Cutters TCT Z2	1.36
24580-5	Core Box Cutters TCT Z2	1.34
24600-5	Ovolo Cutters TCT Z2	1.37
24610-5	Ovolo Cutters TCT Z2	1.38
24620-5	Rounding Over Cutters TCT Z2	1.39
24630-5	Ovolo Cutters TCT Z2	1.36
24640-5	Roman Ogee Cutters TCT Z2	1.50
24700-5	Classical Cutters TCT Z2	1.50
24714	Profile Cutter TCT Z2	1.46
24770	Ball Grooving Cutters TCT Z2	1.47
24780-5 / 24330	Finger Pull Cutters TCT Z2	1.47

Article		Page
24796-02	Bevel Cutter TCT Z2	1.17
24796-03	Profile Cutter TCT Z2	1.46
24796-04	Overlay Trimming Cutter TCT Z2	1.45
24796-06	Water Channel Cutters TCT Z2	1.34
24796-10	Double Radius Cutter TCT Z4+4	1.44
24796-11	Trimming and Surfacing CuttersTCT	1.27
24796-12	Overlay Timming Cutter TCT Z2	1.45
24796-5	Dovetail Cutters TCT Z2	1.10
24800	Raised Panel Cutter TCT Z2	1.51
24810	Core Box Cutter TCT Z2	1.35
24811	Sunk Bead Cutters TCT Z2	1.51
25010-5	Grooving Cutters TCT Z2	1.4
25163	Laminate Floor Slotting Cutter Sets	1.28
25173	Biscuit Slotting Cutter Set TCT Z2	1.29
25180	Weatherstrip Cutter Sets TCT Z2	1.29
25212 / 25213-6	Copying Cutters solid TC Z1	3.2
25213-4	Copying Cutters HS (HSS-E) Z1	2.40
25217	Water Slot Cutters HS (HSS-E) Z1	2.41
25221	Water Slot Cutters HS (HSS-E) Z1	2.41
25230 / 25240	Weatherstrip Cutters TC Z2	1.11
25540	Stepped Cutters for closure fittings	1.27
26010-5	Grooving Cutters TCT Z2	1.4
26180-5	Dowel Drills TCT	2.23
26190-5	Dowel Drills TCT	2.23
30025	Slot Bits TCT	1.28
30100-5	Cylinder Boring Bits TCT Z2+V2	2.31
30103	Hinge Boring Bits TCT Z2+V2	2.27
30110-5	Cylinder Boring Bits TCT Z2+V2	2.32
30120	Twist Drills solid TC	2.5
30130 / 30132	Twist Drills HS	2.33
30140-5	Twist Drills TCT	2.34
30145-4	Dowel Drills HS	2.14
30145-5	Dowel Drills TCT	2.13
30150-5	Twist Drills TCT	2.35
30155-4	Twist Drills HS	2.35
30155-6	Twist Drills solid TC	2.36
30160	Loose Countersink HS Z2+V2	2.40
30170 / 30180	Counterbores	2.45
30175-4	Stockade Drills HS	2.37
30185-4	Counterbores	2.41
30190	Hinge Boring Bits TCT Z2	2.24
30300	Hinge Boring Bits TCT Z2+V2	2.25
30300-9	PCD Hinge Boring Bits Z2+2	2.44
30305	Hinge Boring Bit Sets TCT Z2+V2	2.28
30320 / 30330	Hinge Boring Bits TCT Z3+V3	2.27
30360	ISODUR Hinge Boring Bits TCT Z2+V2	2.26
30360-5	CABINEO Hinge Boring Bit Sets TCT	2.29
30390	Hinge Boring Bits TCT Z2+V2	2.29
30510	Dowel Drills TCT	2.15
30515	Dowel Drills TCT	2.24
30530-4	Dowel Drills HS	2.14
30530-5	Dowel Drills TCT	2.12
30540-5	Dowel Drill TCT	2.10
30540-5	Dowel Drill TCT	2.11
30540-9	PCD Dowel Drills Z2	2.43
30550-6	Dowel Drills solid TC	2.7
30555	ISODUR Dowel Drills TCT	2.9
30559-6	Dowel Drills solid TC	2.8
30560	Through hole Drills TCT	2.18
30565-9	PCD Through hole Drills Z1	2.42
30566	Through hole Drills TCT	2.16
30566	Through hole Drills TCT	2.17
30566-9	PCD Through hole Drills Z2	2.43
30567	Through hole Drills TCT	2.18
30568	Through hole Drills - Solid TC	2.19
30569	Through hole Drill - Solid TC	2.19
30570	ISODUR Through hole Drills TCT	2.21
30573-6	Through hole Drills - Solid TC	2.20
30650-5	Loose Countersink TCT Z2	2.39
30660	Loose Countersink TCT Z2	2.39
30700-5	Dowel Drills TCT	2.22
30705-5	Dowel Drills TCT	2.22
30710-5	Dowel Drills TCT	2.22
30715-5	Dowel Drills TCT	2.22
30730-5	Dowel Drills TCT	2.23

Index by Part-Nos.

Article		Page
30755-5	Countersink TCT Z2	2.38
34540-6	Countersink solid TC Z3	2.38
34540-6	Countersink solid TC Z3	2.38
39021	Allen Screws	7.20
39042	Pull Studs, Spare parts	6.23
39048	Adaptors	6.13
39050 - 39064	Ball bearings / Guide rings	7.28
39052 / 39054 / 39075	Screws	7.21
39070	Allen Screws	7.20
39072 / 39115	Allen Screws	7.20
39074 / 39075	Allen Screws	7.20
39076 - 39086	Screws	7.22
39077	Keys	7.17
39095	Clamping body set 3-parts	7.25
39100	Clamping wedges	7.24
39120 / 39140	Keys	7.17
39125	Screws	7.21
39150	Screws, Nuts	7.23
39153	Screws, Nuts	7.23
39155	C-Spanners / Engineers´wrench	7.18
39155 / 39157	C-Spanners / Engineers´wrench	7.18
39156	Torque Spanners	7.19
39156 / 39256	Torque Spanners	7.19
39158	C-Spanners / Engineers´wrench	7.18
39162	C-Spanners / Engineers´wrench	7.18
39165	Screws	7.21
39180	Reversible TC tips special forms	7.5
39190	Screws, Nuts	7.23
39191	Pull Studs, Spare parts	6.23
39192	Screws, Nuts	7.23
39200	Screws, Nuts	7.23
39210	Slotted Bushings	1.53
39220	Bushings for Twist Drills	2.4
39225	Bushings for Twist Drills	2.4
39256	Torque Spanners	7.19
39264	Screws, Nuts	7.23
39265	Screws	7.21
39266	Allen Screws	7.20
39340	Clamping wedges	7.24
39360	Clamping wedges	7.24
39400	Collet Chucks	1.52
39440	Arbors	1.31
39495	Clamping Flanges for Saw Blades	6.7
39495	Clamping Flanges for Saw Blades	6.7
39498	Clamping Flange for Saw Blades	6.6
39498-0	Clamping Flange for Saw Blades	6.6
39499	PREZISO Turbine	6.17
39499	Dust and Chip Extraction Turbine	6.18
39500	Reduction pieces	1.52
39510	Interchangeable Shanks	1.53
39520	Interchangeable Shanks	1.53
39540 / 39541	Standard Spacers	7.26
39548	Spacer sets	7.27
39548	Spacer Set	7.27
39561	Distance spacers	7.25
39710	Services	7.31
39720	Services	7.31
39740 / 39745	Services	7.32
39750	Services	7.32
39790	Services	7.31
39790 - 39795	Services	7.31
39800	Template costs	7.32
39810 / 39820	Services	7.29
39825	Services	7.31
39830 - 39838	Services	7.30
39840	Services	7.29
39850 / 39851	Services	7.29
39860 - 39862 / 39865	Services	7.29
39870	Services	7.30
39880	Services	7.30
39885	Services	7.30
39888-6	Coating for solid TC	3.10
39890	Services	7.30
39910	Services	7.32
39920	Services	7.32

Article		Page
39921	Services	7.32
40145	Grooving Cutters w. rev. TC tips	4.22
40150 / 40160	Grooving Saw Blades TCT Z6 / Z12	4.59
40180	PCD Grooving Saw Blades	5.29
40190	PCD Grooving Cutter	5.29
40190-9	PCD Grooving Cutter	5.29
41650	Dianova Jointing Cutters	5.30
41650	Dianova Jointing Cutters	5.30
60200	Adjustable Grooving Cutters w. rev.	4.21
60200	Adjustable Grooving Cutters w. rev.	4.21
60250	Grooving Cutters w. rev. TC tips	4.22
60255	Grooving Cutters w. rev. TC tips	4.22
61200	Corner Notching Cutter w. reversible	4.27
62160	Jointing/Rebating Cutterheads w. rev.	4.17
62300	Helical Cutterhead w. rev. TC tips	4.15
62300-5	Helical Cutterhead w. rev. TC tips	4.16
64410 - 64418	Rounding Over/Bevelling Set Z2	4.32
64410 - 64418	Rounding Over/Bevelling Set Spare	4.33
72005	Reversible TC tips TH9	7.2
72005	Reversible TC tips TH9	7.2
72010	Reversible TC tips TH10,5 / 12	7.3
72010	Reversible TC tips TH10,5 / 12	7.3
72010 / 72050	Reversible TC tips TH10,5 / 12	7.3
72010-9 / 72014-9	Reversible / interchangeable PCD tips	7.2
72013 / 72055	Reversible TC tips TH4,1 / 5,5	7.1
72014	Reversible TC tips TH9,8 / 12	7.4
72014	Reversible TC tips TH9,8 / 12	7.4
72015	Reversible TC tips TH9 / 12	7.5
72015-L / -R	Reversible TC tips TH9 / 12	7.5
72016	Reversible TC tips TH9,8 / 12	7.4
72018	Reversible TC tips special forms	7.6
72019	Reversible TC tips special forms	7.6
72020 / 72021	Reversible TC tips special forms	7.5
72023	Reversible TC tips special forms	7.6
72025	Reversible TC tips special forms	7.6
72084	Reversible TC tips special forms	7.6
72090	Interchangeable TC pins and tips	7.15
72095	Interchangeable TC plunge tips	7.15
72120 / 72124 / 72125	Reversible TC tips TH6 / 7	7.1
72140	Reversible profile tips TC	7.7
72142	Reversible profile tips TC	7.7
72145	Reversible profile tips TC	7.7
72148	Reversible profile tips TC	7.7
72149	Reversible profile tips TC	7.7
72160	Edge bevelling/rounding knives TC	7.16
72190	Rerversible profile tips TC	7.8
72240	Reversible rounding over tips TC	7.8
72432	Interchangable Rounding over /	7.9
72434	Interchangable Rounding over /	7.9
72460 - 72485	Interchangeable TC knives	7.14
72490	Interchangeable TC knives	7.13
72510	Interchangeable Rounding over /	7.10
72529 / 72530 / 72534	Interchangeable TC knives	7.11
72530/72440/72542	Interchangeable TC knives	7.11
72530 / 72531	Interchangeable TC knives	7.12
72533	Interchangeable TC knives	7.12
72560	Interchangeable Profile tips TC	7.10
72750 / 72751	Interchangeable TC knives	7.13
81000 / 85000	Circular Saw Blades TCT	4.58
93103	End Mill Cutters solid TC Z1	3.11
93113	End Mill Cutters solid TC Z1	3.11
93303	Multi-tooth End Mill cutters solid TC	3.12
93503	Multi-tooth End Mill cutters solid TC	3.12
96113	Ball Nose Cutters solid TC Z1	3.12
96123	V-Groove Cutters solid TC Z1	3.13

Tools for Portable Routers

Precision creates value

Grooving Cutter TCT Z2

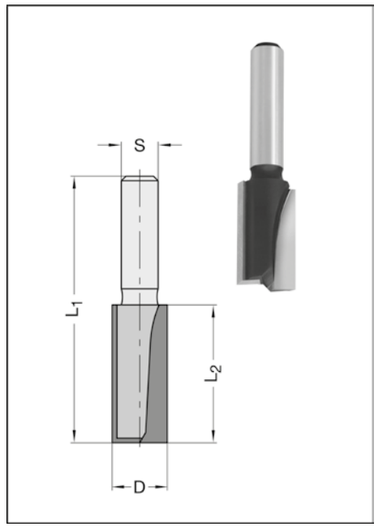

24220-5 regular length

D mm	L_2 mm	L_1 mm	Shank mm	Part-No.
3	8	37	6	24221-5-03006-R
3	8	37	6,35	24222-5-03006-R
3	8	37	8	24223-5-03006-R
4	10	40	6	24221-5-04008-R
4	10	40	6,35	24222-5-04008-R
4	10	40	8	24223-5-04008-R
5	12	45	6	24221-5-05012-R
5	12	45	6,35	24222-5-05012-R
5	12	45	8	24223-5-05012-R
6	16	45	6	24221-5-06016-R
6	16	45	6,35	24222-5-06016-R
6	16	45	8	24223-5-06016-R
7	16	45	6	24221-5-07016-R
7	16	45	6,35	24222-5-07016-R
8	20	48	6	24221-5-08020-R
8	20	48	6,35	24222-5-08020-R
8	20	48	8	24223-5-08020-R
8	30	58	6	24221-5-08030-R
8	30	58	6,35	24222-5-08030-R
8	30	58	8	24223-5-08030-R
9	20	48	6,35	24222-5-09020-R
10	20	48	6	24221-5-10020-R
10	20	48	6,35	24222-5-10020-R
10	20	48	8	24223-5-10020-R
10	30	58	6	24221-5-10030-R
10	30	58	6,35	24222-5-10030-R
10	30	58	8	24223-5-10030-R
11	20	48	6,35	24222-5-11020-R
12	20	48	6	24221-5-12020-R
12	20	48	6,35	24222-5-12020-R
12	20	48	8	24223-5-12020-R
12	30	58	6,35	24222-5-12030-R
12	30	58	8	24223-5-12030-R
14	20	48	6	24221-5-14020-R
14	20	48	6,35	24222-5-14020-R
14	20	48	8	24223-5-14020-R
14,5	20	48	6,35	24222-5-14520-R
15	20	48	6,35	24222-5-15020-R
15	20	48	8	24223-5-15020-R
15	30	58	6,35	24222-5-15030-R
15	30	58	8	24223-5-15030-R
16	20	48	6	24221-5-16020-R
16	20	48	6,35	24222-5-16020-R
16	20	48	8	24223-5-16020-R
16	30	58	6,35	24222-5-16030-R
16	30	58	8	24223-5-16030-R
18	20	48	8	24223-5-18020-R
18	30	58	6,35	24222-5-18030-R
18	30	58	8	24223-5-18030-R
20	20	55	6,35	24222-5-20001-R
20	20	48	8	24223-5-20020-R
22	20	60	6,35	24222-5-22001-R

Technical details
Cutting on bottom and periphery. With ground plunge tip. Right-hand rotation. For manual feed.

Application
For general routing operations, e.g. grooving, jointing, etc. in solid wood and various kinds of panel materials.

Grooving Cutters TCT Z2

with TCT plunge tip

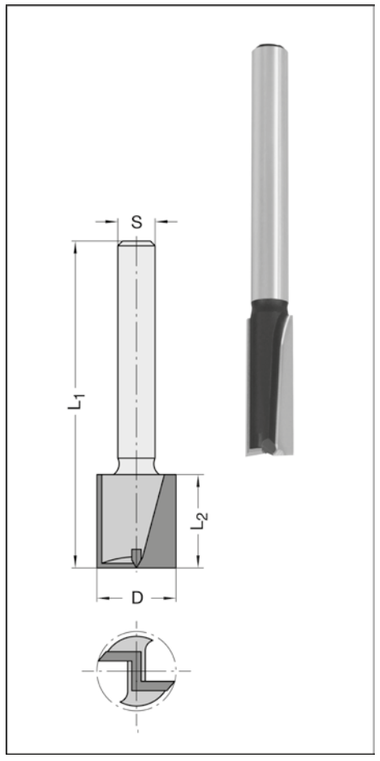

24240-5 extra length

D mm	L_2 mm	L_1 mm	Shank mm	Part-No.
2	6	55	8	24243-5-02006-R
2,5	6	55	8	24243-5-02506-R
3	8	55	8*	24243-5-03006-R
4	10	55	8	24243-5-04010-R
5	12	55	8	24243-5-05012-R
6	14	55	8	24243-5-06014-R
6	25	60	8	24243-5-06025-R
7	15	55	8	24243-5-07017-R
8	20	55	8	24243-5-08020-R
8	30	90	8	24243-5-08030-R
9	20	55	8	24243-5-09020-R
10	20	60	8	24243-5-10020-R
10	30	90	8	24243-5-10030-R
11	20	60	8	24243-5-11020-R
12	20	60	8	24243-5-12020-R
12	30	90	8	24243-5-12030-R
13	20	60	8	24243-5-13020-R
14	20	60	8	24243-5-14020-R
14	30	90	8	24243-5-14030-R
15	20	70	8	24243-5-15020-R
16	20	70	8	24243-5-16020-R
16	30	90	8	24243-5-16030-R
17	20	70	8	24243-5-17020-R
18	20	70	8	24243-5-18020-R
18	30	97	8	24243-5-18097-R
19	20	70	8	24243-5-19020-R
20	20	70	8	24243-5-20020-R
20	30	97	8	24243-5-20097-R
21	20	70	8	24243-5-21020-R
22	16	70	8	24243-5-22016-R
24	16	70	8	24243-5-24016-R
25	16	70	8	24243-5-25016-R
30	16	70	8	24243-5-30016-R

* For Ø 3 mm with shank 6 and 6,35 mm see No. 24220-5, on page 1.1.

Technical details
Cutting on bottom and periphery. D = 2 and 2,5 mm in Z = 1. With TCT plunge tip. Right-hand rotation.
For manual feed.

Application
For general routing operations, e.g. grooving, jointing, etc. in solid wood and panel materials.

Tools for Portable Routers

Grooving Cutters TCT Z2

with TCT plunge tip

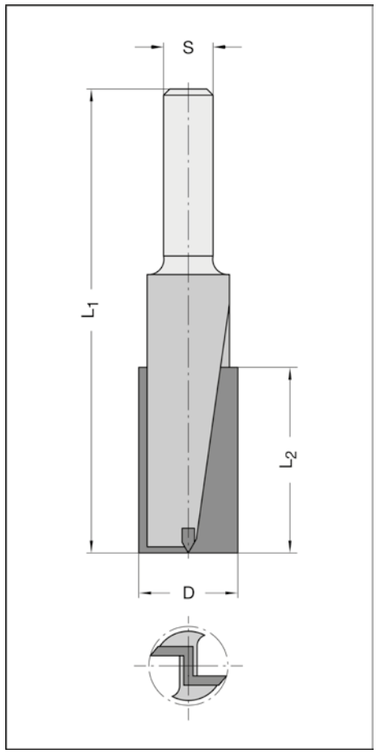

24235-5 shank 10 x 35 mm

D mm	L_2 mm	L_1 mm	Part-No.
4	10	49	24235-5-04000-R
5	12	49	24235-5-05000-R
6	14	53	24235-5-06000-R
7	15	55	24235-5-07000-R
8	20	60	24235-5-08000-R
9	20	60	24235-5-09000-R
10	23	70	24235-5-10023-R
18	25	70	24235-5-18023-R
30	25	70	24235-5-30000-R
Extra length, shank 10 x 50 mm			
10	40	97	24235-5-10040-R
12	40	97	24235-5-12040-R
14	40	97	24235-5-14040-R
Extra length, shank 10 x 45 mm			
20	45	97	24235-5-20045-R

20200-5 / 24246-5 / 24796-5

D mm	L_2 mm	L_1 mm	Part-No.
Shank 12 x 30 mm			
10	22	60	24796-5-00001-R
Shank 12 x 40 mm			
12	26	72	20200-5-12000-R
12	45	90	24246-5-12045-R
14*	30	80	20200-5-14000-R
16	60	100	24246-5-16060-R
18	45	90	24246-5-18045-R
20	38	88	20200-5-20000-R
20	45	90	24246-5-20045-R
22	40	92	20200-5-22000-R
25	40	92	20200-5-25000-R
30	42	94	20200-5-30000-R
Shank 12 x 50 mm			
10	35	90	24246-5-10000-R
12	35	90	24246-5-12000-R
14	35	90	24246-5-14000-R
15	35	90	24246-5-15000-R
16	35	90	24246-5-16000-R
18	35	90	24246-5-18000-R
20	35	90	24246-5-20000-R
22	35	90	24246-5-22000-R
24	35	90	24246-5-24000-R
30	35	90	24246-5-30000-R

* as D= 14 x 50 mm see "aperture cutters" page 4.60.

Technical details
Two straight TCT cutting edges for cutting on bottom and periphery. Right-hand rotation. For manual feed.

Application
For general routing operations, e.g. grooving, jointing, etc. in solid wood and panel materials.

Grooving Cutters TCT Z2

with TCT plunge tip

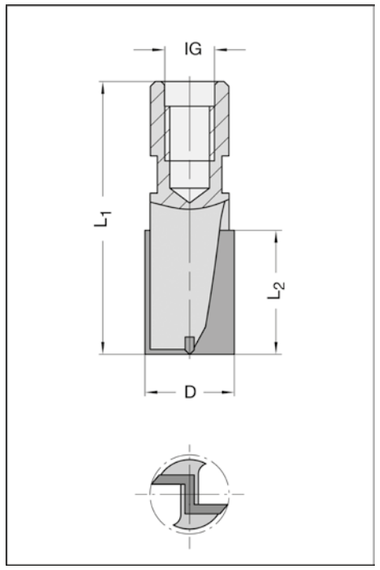

26010-5 internal thread M 10

D mm	L_2 mm	L_1 mm	Part-No.
3	8	47	26010-5-03006-R
4	10	49	26010-5-04010-R
5	12	50	26010-5-05012-R
6	14	55	26010-5-06014-R
8	20	55	26010-5-08020-R
10	23	55	26010-5-10022-R
12	23	55	26010-5-12022-R
16	25	55	26010-5-16025-R
18	25	55	26010-5-18025-R
20	25	55	26010-5-20025-R
25	25	55	26010-5-25025-R
Extra length			
8	35	67	26010-5-08035-R
10	35	67	26010-5-10035-R
12	35	67	26010-5-12035-R
14	35	67	26010-5-14035-R
16	45	75	26010-5-16045-R
18	45	75	26010-5-18045-R
20	45	75	26010-5-20045-R
22	45	75	26010-5-22045-R
24	45	75	26010-5-24045-R

25010-5 internal thread M 12 x 1

D mm	L_2 mm	L_1 mm	Part-No.
10	23	60	25010-5-10025-R
12	23	60	25010-5-12025-R
16	25	60	25010-5-16025-R
16	35	67	25010-5-16035-R
18	25	60	25010-5-18025-R
20	25	60	25010-5-20025-R
20	35	67	25010-5-20035-R
22	25	60	25010-5-22025-R
24	25	60	25010-5-24025-R
25	25	60	25010-5-25025-R
Extra length			
8	35	67	25010-5-08035-R
10	35	67	25010-5-10035-R
12	45	77	25010-5-12045-R
14	35	67	25010-5-14035-R
15	45	77	25010-5-15045-R
16	45	77	25010-5-16045-R
16	60	92	25010-5-16060-R
18	45	77	25010-5-18045-R
18	60	92	25010-5-18060-R
20	45	77	25010-5-20045-R
20	60	92	25010-5-20060-R

Technical details
Two straight TCT cutting edges for cutting on bottom and periphery. Right-hand rotation. For manual feed.
IG = internal thread

Application
For general routing operations, e.g. grooving, jointing, etc. in solid wood and panel materials.

Grooving Cutters with reversible TC tip Z1

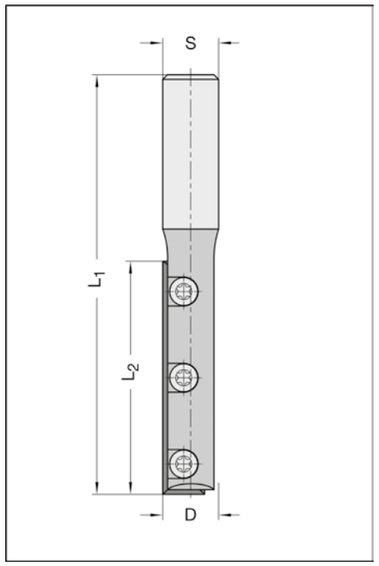

22350

D mm	L_2 mm	L_1 mm	Shank mm	Part-No.
12	50	95	12 x 40	22356-5-12050-R
12,7 (1/2")	50	95	12 x 40	22356-5-12750-R
14	50	95	12 x 40	22356-5-14050-R

Technical details
Single edge design, with one reversible TC tip, 4-sided in 3-hole design. Plunge cutting possible in several strokes. Right-hand rotation. For manual feed.

Application
Especially designed to be used with jigs for worktop joints. On account of a risk of breakage, severing operations in solid hardwood have to be executed in several working steps.
For workpieces below 30 mm thickness we recommend the application of cutter No. 22340 (page 1.6) with L_2 = 30 mm.

Spare parts / Accessories		Part-No.
Reversible TC tip	50 x 9 x 1,5 mm, 4-sided, HW 01, 3-hole-design	72005-6-05001-0
Torx clamping screw	M 3,5 x 7, T15	39080-0-03570-R
Torx key	T15, with flag	39077-0-04015-1

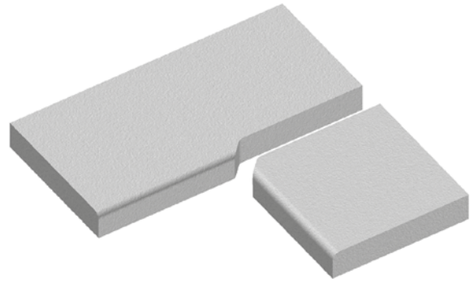

Tools for Portable Routers

Grooving Cutters with reversible TC tip Z1

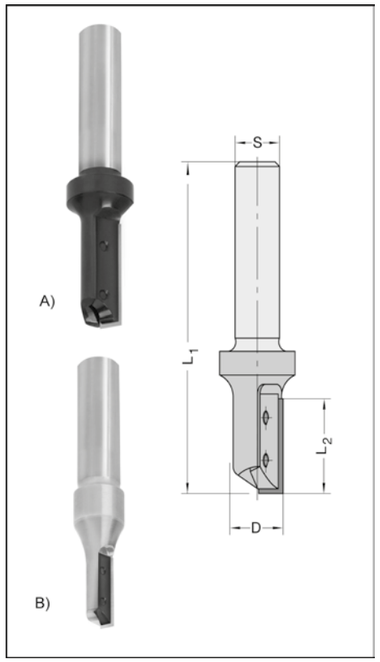

22340

D mm	L_2 mm	L_1 mm	Part-No.
Shank 8 x 25 mm			
8	20	60	22343-5-08020-R
10	20	60	22343-5-10020-R
12	20	60	22343-5-12020-R
14	30	70	22343-5-14030-R
Shank 10 x 40 mm			
8	20	70	22345-5-08020-R
9	20	70	22345-5-09020-R
10	25	75	22345-5-10025-R
12	30	80	22345-5-12030-R
Shank 12 x 40 mm			
8	20	70	22346-5-08020-R
10	25	75	22346-5-10025-R
12	30	80	22346-5-12030-L
12	30	80	22346-5-12030-R
14	30	80	22346-5-14030-R
16	50	100	22346-5-16050-R
Shank 12,7 x 40 mm			
12,7 (½")	30	80	22349-5-12730-L
12,7 (½")	30	80	22349-5-12730-R
Shank 12 x 40 mm, w. body made of high-density metal			
8	20	80	22346-5-08020-D
10	25	80	22346-5-10025-D
12	30	90	22346-5-12030-D

Technical details

Single edge design. Constant cutting circle. Mini reversible tip of high grade TC quality. With transverse groove to keep the tip in perfect position and to prevent it from slipping in axial direction.
Clamping of the tip by clamping wedge with tempered TORX screws. ø 8-12,7 mm on certain conditions also applicable for plunge cutting. Cutter body of tool steel (design A), of high-density metal (design B).
Right-hand rotation. For manual feed.

Application

For general routing operations, e.g. grooving, jointing, etc. in solid wood and panel materials.

For high-wear application with ø 8/10/12 mm, use cutters with body made of high-density metal **(design B)** for safety reasons.

Spare parts / Accessories		Part-No.
Reversible TC tip	20 x 4,1 x 1,1 mm, for D= 8/9/9,52 mm	72013-6-20041-0
Reversible TC tip	20 x 5,5 x 1,1 mm, for D=10/12 mm	72013-6-20055-0
Reversible TC tip	25 x 5,5 x 1,1 mm, for D=10/11 mm	72013-6-25055-0
Reversible TC tip	30 x 5,5 x 1,1 mm, for D=12-14 mm	72013-6-30055-0
Reversible TC tip	50 x 5,5 x 1,1 mm, for D=16 mm	72013-6-50055-0
Clamping wedge	8/9/9,52 x 20 mm R	39340-0-08020-R
Clamping wedge	10 x 20 mm R	39340-0-10020-R
Clamping wedge	10/11 x 25 mm R	39340-0-10025-R
Clamping wedge	12 x 20 mm R	39340-0-12020-R
Clamping wedge	12/12,7 x 30 mm R	39340-0-12030-R
Clamping wedge	14 x 30 mm R	39340-0-14030-R
Clamping wedge	16 x 50 mm R	39340-0-16050-R
Torx clamping screw	M 2,5 x 3,0 T 8, for D= 8 mm	39080-0-25301-R
Torx clamping screw	M 2,5 x 4,0 T 8, for D= 9-11 mm	39080-0-25401-R
Torx clamping screw	M 3 x 7,0 T 8, for D=12-14 mm	39080-0-30701-R
Torx clamping screw	M 3,5 x 5,5 T15, for D=16 mm	39080-0-35551-R
Torx key	T 8, with flag	39077-0-03008-1
Torx key	T15, with flag	39077-0-04015-1
Torx key	T15, with handle	39077-0-04015-2

Grooving Cutters with reversible TC tips Z1

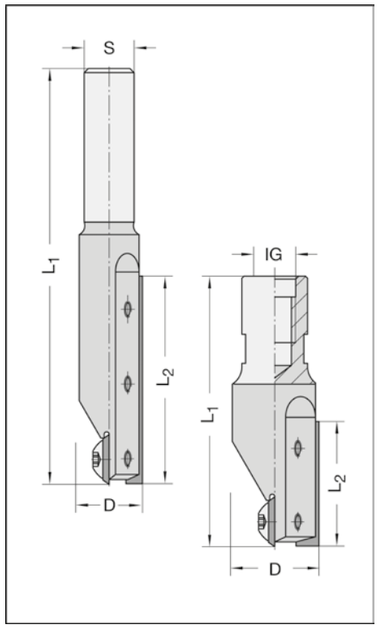

22363 - 22368 with rev. TC plunge tip

D mm	L_2 mm	L_1 mm	Part-No.
Shank 8 x 30 mm			
16	30	71	22363-5-16030-R
18	30	71	22363-5-18030-R
20	30	71	22363-5-20030-R
22	30	71	22363-5-22030-R
Shank 12 x 40 mm			
16	30	81	22366-5-16030-L
16	30	81	22366-5-16030-R
16	50*	101	22366-5-16050-R
18	30	81	22366-5-18030-R
18	50	101	22366-5-18050-R
20	30	81	22366-5-20030-R
20	50	101	22366-5-20050-R
22	30	81	22366-5-22030-R
Internal thread M 10			
16	30	65	22367-5-16030-R
18	30	65	22367-5-18030-R
20	30	65	22367-5-20030-R
22	30	65	22367-5-22030-R
Internal thread M 12 x 1			
16	30	65	22368-5-16030-R
16	50	85	22368-5-16050-R
18	30	65	22368-5-18030-R
20	30	65	22368-5-20030-R
20	50	85	22368-5-20050-R

* further shank variants see page 4.1

Technical details

Single edge design. Reversible TC centre tip for plunge cutting. Clamping of the tips by clamping wedges.
IG = shank with internal thread - complete with key flat. Right-hand rotation. For manual feed.

Application

For general routing operations, e.g. for grooving, jointing, rebating, etc. in solid wood and panel materials.

Spare parts / Accessories		Part-No.
Reversible TC tip	30 x 5,5 x 1,1 mm	72013-6-30055-0
Reversible TC tip	50 x 5,5 x 1,1 mm	72013-6-50055-0
Interch. TC tip	12 x 12 x 1,5 mm, plunge tip	72014-6-01201-0
Clamping wedge	for D = 14,5/16 x 20 mm	39360-0-16020-R
Clamping wedge	for D= 16 x 30 mm R	39360-0-16030-R
Clamping wedge	for D= 16 x 50 mm R	39360-0-16050-R
Clamping wedge	for D= 18 x 30 mm R	39360-0-18030-R
Clamping wedge	for D= 18 x 50 mm R	39360-0-18050-R
Clamping wedge	for D= 20 x 30 mm R	39360-0-20030-R
Clamping wedge	for D= 20 x 50 mm R	39360-0-20050-R
Clamping wedge	for D= 22 x 30 mm R	39360-0-22030-R
Torx clamping screw	M 3,5 x 5,5 T15, for D=14,5/16/18 mm	39080-0-35551-R
Torx clamping screw	M 3,5 x 6,5 T15, for D= 20/22 mm	39080-0-35651-R
Torx clamping screw	M 4 x 5,9, extra-large head, T15, f. D=14,5/16/18 mm plunge tips	39076-0-04000-R
Torx clamping screw	M 4 x 7, extra-large head, T15, for D= 20/22 mm plunge tips	39076-0-04070-R
Torx key	T15, with flag	39077-0-04015-1
Torx key	T15, with handle	39077-0-04015-2

Grooving/Face Plate Cutters w.rev. TC tips Z1

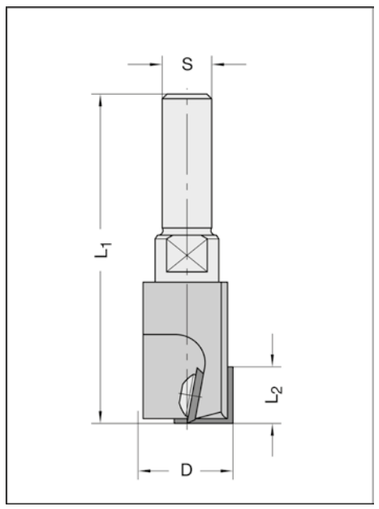

22320 interchangeable shank design

D mm	L_2 mm	L_1 mm	Part-No.
Shank 8 x 30 mm			
16	12	70	22323-5-16000-R
18	12	70	22323-5-18000-R
20	12	70	22323-5-20000-R
24	12	70	22323-5-24000-R
Shank 10 x 30 mm			
16	12	70	22325-5-16000-R
18	12	70	22325-5-18000-R
20	12	70	22325-5-20000-R
24	12	70	22325-5-24000-R
Shank 12 x 30 mm			
16	12	70	22326-5-16000-R
18	12	70	22326-5-18000-R
20	12	70	22326-5-20000-R
24	12	70	22326-5-24000-R
Shank 12,7 x 40 mm			
16	12	80	22329-5-16000-R
18	12	80	22329-5-18000-R
20	12	80	22329-5-20000-R
24	12	80	22329-5-24000-R
Internal thread M 12 x 1			
16	12	60	22328-5-16000-R
18	12	60	22328-5-18000-R
20	12	60	22328-5-20000-R
24	12	60	22328-5-24000-R

Technical details
With one reversible TC tip, cutting on bottom and periphery, 4-sided, and one reversible TC tip for plunge cutting, with shear angle. Right-hand rotation. For manual feed.

Application
For grooving and rebating operations of little cutting depth in solid wood and panel materials on portable and stationary routers. Especially recommended for cutting grooves in door production, e.g. for face-plates, hinge grooves, fixing straps for floor sealings.

Spare parts / Accessories		Part-No.
Reversible TC tip	7,5 x 12 x 1,5 mm, 2-sided, plunge tip for D= 16/18 mm	72010-6-00751-0
Reversible TC tip	9 x 12 x 1,5 mm, 2-sided, plunge tip for D= 20 mm	72010-6-00900-0
Interch. TC tip	12 x 12 x 1,5 mm, 4-sided, for D= 16, 18 a. 20 mm periphery-, f. D= 24 mm periphery and plunge tip	72014-6-01201-0
Torx clamping screw	M 3,5 x 4 extra-large head, T15, for D= 16/18 mm, periphery tip	39076-0-03500-R
Torx clamping screw	M 4 x 4 extra-large head, T15, f. D= 20 mm, periphery tip	39076-0-04040-R
Torx clamping screw	M 4 x 5,9, extra large head, T15, f. D= 24 mm, periphery and plunge tip	39076-0-04000-R
Torx clamping screw	M 4 x 5, T15, for D= 16/18/20 mm plunge tip	39081-0-04050-R
Torx key	T15, with flag	39077-0-04015-1

Grooving Cutters with reversible TC tips Z2

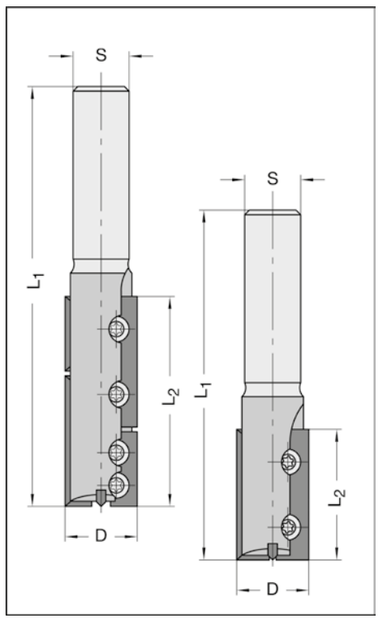

22030 with TCT plunge tip

D mm	L_2 mm	L_1 mm	Shank mm	Part-No.
16	28	75	12 x 40	22036-5-16028-R
16	45	90	12 x 40	22036-5-16045-R
16	45	80	M 10	22037-5-16045-R

Technical details
Tool body with two straight TC tips. With single-sided TC tips, for L_2 = 45 mm with two each staggered tips 16 and 28 mm. With TCT tip for plunge cutting. Right-hand rotation. For manual feed.

Application
For general routing operations, e.g. grooving, jointing, severing of solid wood and panel materials.

Spare parts / Accessories		Part-No.
Interch. TC tip	16 x 7 x 1,5 mm, HW 02, for D = 16 mm	72120-6-01600-0
Interch. TC tip	28 x 7 x 1,5 mm, HW 02, for D = 16 mm	72120-6-02800-0
Reversible TC tip	30 x 9 x 1,5 mm, 4-sided, HW 03, for D = 18 /20 mm	72005-6-03003-0
Reversible TC tip	50 x 9 x 1,5 mm, 4-sided, HW 03, 3-hole design, for D = 18 /20 mm	72005-6-05003-0
Torx clamping screw	M 3 x 4, T 9 for D = 16 mm	39081-0-03040-R
Torx clamping screw	M 3,5 x 4, T15 for D = 18/20 mm	39080-0-03540-R
Torx key	T 9, with handle	39077-0-03009-2
Torx key	T15, with handle	39077-0-04015-2

Dovetail Cutter with reversible TC tips Z2

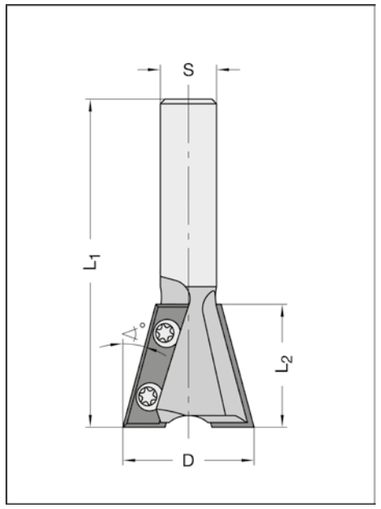

22726

D mm	L_2 mm	Angle	L_1 mm	Shank mm	Part-No.
28	26	15°	70	12 x 40	22726-5-28000-R

Technical details
Tool body with two reversible TC tips, HW 03 grade, with bevel on both sides. Right-hand rotation. For manual and mechanical feed.

Application
For dovetail joints in solid wood, panel materials and solid surface materials.

Spare parts / Accessories		Part-No.
Reversible TC tip	27 x 9 x 1,5 mm, HW 03	72015-6-02703-R
Torx clamping screw	M 3,5 x 4,8, T15	39080-0-03548-R
Torx key	T15, with flag	39077-0-04015-1

Dovetail Cutters TCT Z2

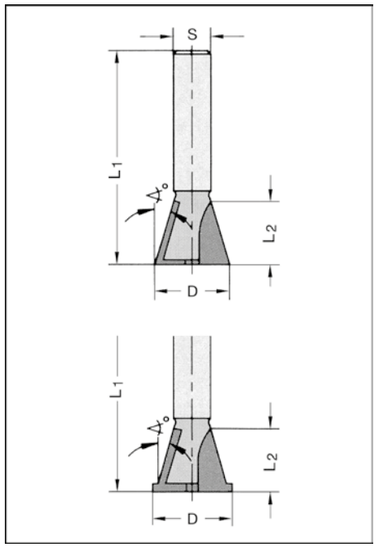

24320-5

D mm	L_2 mm	Angle	L_1 mm	Shank mm	Part-No.
13,5	12,5	12°40´	46	8	24323-5-13500-R

24796-5

D mm	L_2 mm	Angle	L_1 mm	Shank mm	Part-No.
28	25	15°	70	12 x 40	24796-5-00005-R

24320-5 with scorer

D mm	L_2 mm	Angle	L_1 mm	Shank mm	Part-No.
14,3	13,5	15°	46	8	24323-5-14300-R

Technical details
Two TCT cutting edges, cutting on bottom and periphery. Right-hand rotation. For manual feed.

Application
For dovetail joints on portable routers in conjunction with dovetail jigs, devices, etc.

Panel Pilot Cutters TCT Z1

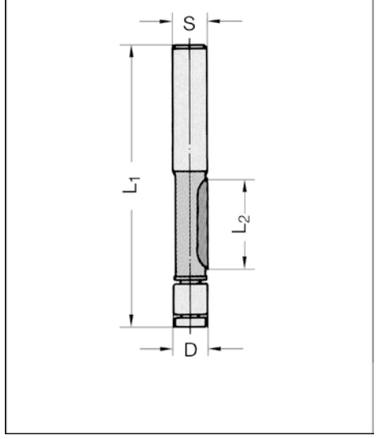

24410-5 with ball bearing guide

D mm	L_2 mm	L_1 mm	Shank mm	Part-No.
6,35	16	58	6	24411-5-06300-R
6,35	16	58	6,35	24412-5-06300-R
6,35	16	58	8	24413-5-06300-R

Technical details
Single TCT cutting edge, cutting on periphery only. With ball bearing guide. Right-hand rotation. For manual feed.

Application
For contour cutting, copying of straight or curved shapes in conjunction with templates on portable routers.

Spare parts / Accessories		Part-No.
Ball bearing	6,35 mm ø, d= 3,175 mm	39050-0-06350-0

Panel Pilot Cutter TCT Z1+1

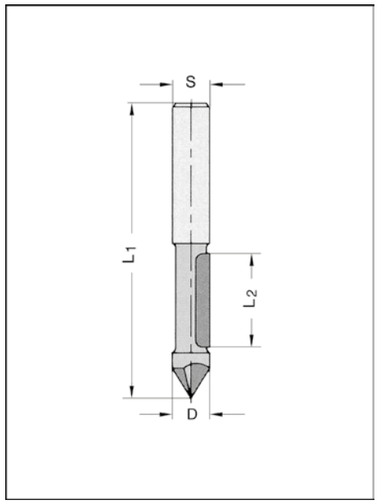

24420-5 with TCT plunge tip

D mm	L_2 mm	L_1 mm	Shank mm	Part-No.
6,35	20	63	6	24425-5-06300-R
6,35	20	63	6,35	24426-5-06300-R
8	20	63	8	24427-5-08000-R

Technical details
One cutting edge on bottom and one on periphery. Right-hand rotation. For manual feed.

Application
For apertures, contour cutting, copying, etc. on portable routers. Also suitable for foamed materials.

Weatherstrip Cutters TC Z2

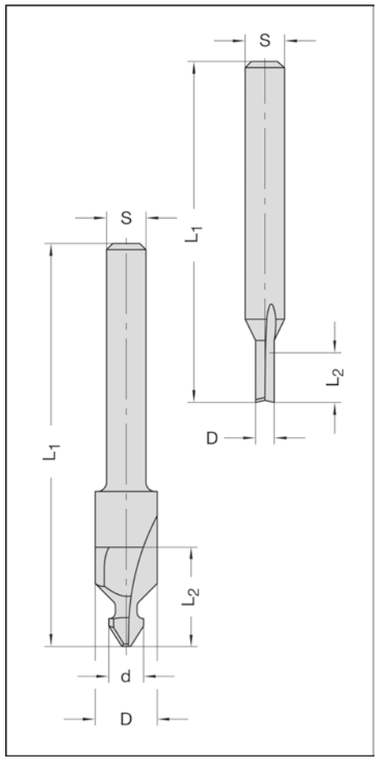

24220 straight

D mm	L_2 mm	L_1 mm	Shank mm	Part-No.
3	8	55	6	24221-5-30655-R
3	8	55	6,35	24222-5-30655-R

25230 / 25240 anchor profile

d/D mm	L_2 mm	L_1 mm	Shank mm	Part-No.
Without mould				
5,5/-	10	65	6,35	25232-5-05506-R
With mould				
5,5/10	14	65	6,35	25242-5-10063-R

Technical details
Two solid TC milling edges, cutting on bottom and periphery. Right-hand rotation. For manual feed.

Application
For straight or profiled weatherstrip grooves on windows and doors.

V-Grooving/Engraving Cutters TC Z3

interch. shank design

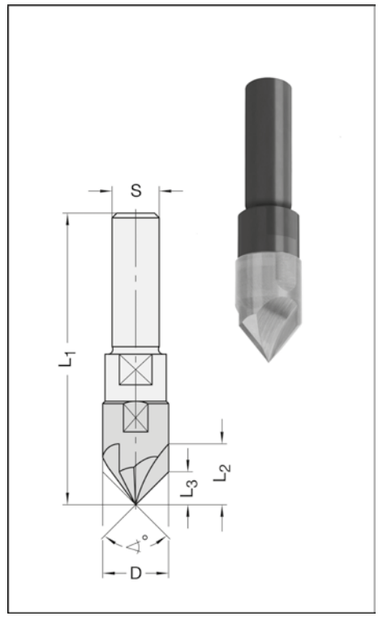

24540-6 new design

D mm	L_2 mm	L_3 mm	Angle	L_1 mm	Shank mm	Part-No.
14	15,5	12	60°	57	6,35	24542-6-14060-R
14	15,5	12	60°	62	8	24543-6-14060-R
14	15,5	12	60°	62	10	24545-6-14060-R
14	15,5	12	60°	62	12	24546-6-14060-R
14	12,5	7	90°	57	6,35	24542-6-14090-R
14	12,5	7	90°	62	8	24543-6-14090-R
14	12,5	7	90°	62	10	24545-6-14090-R
14	12,5	7	90°	62	12	24546-6-14090-R

Technical details
Solid TC head with three cutting edges with pointed ground. Facet ground.
Parallel shank without clamping flat - without length adjusting screw. Right-hand rotation. For manual feed.

Application
For V-grooves, decorative grooves, lettering of solid wood or various kinds of wood composites and boards.
Also applicable for subsequent 90° bevelling of pilot drilled holes.
In mechanical feed also useable on CNC-machines in the main spindle.
For use as a countersunk in the boring gear, we recommend No. 34540-6, page 2.38.

V-Grooving/Engraving Cutters TC Z3

interch. shank design

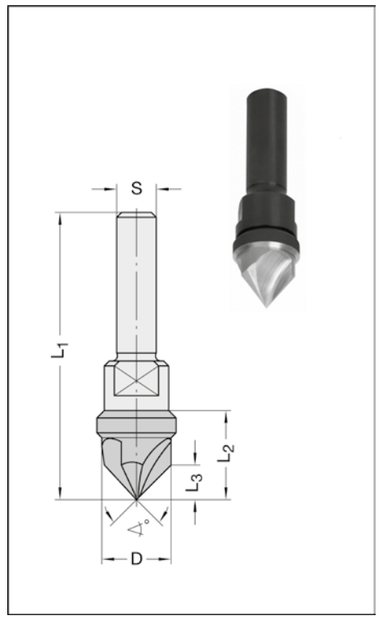

24540-5

D mm	L_2 mm	L_3 mm	Angle	L_1 mm	Shank mm	Part-No.
mping flat and length adjusting screw						
14	12,5	7	90°	58	6,35	24542-5-14090-R
14	12,5	7	90°	63	8	24543-5-14090-R
With clamping flat and length adjusting screw						
14	12,5	7	90°	70	10	24545-5-14002-R

Technical details
Solid TC head with three cutting edges with pointed ground. Right-hand rotation. For manual feed.
Design up to beginning 2022.

Application
For V-grooves, decorative grooves, lettering of solid wood or various kinds of wood composites and boards.
Also applicable for subsequent 90° bevelling of pilot drilled holes.
In mechanical feed also useable on CNC-machines in the main spindle.
For use as a countersunk in the boring gear, we recommend No. 34540-6, page 2.38.

V-Grooving/Engraving Cutter TCT Z2

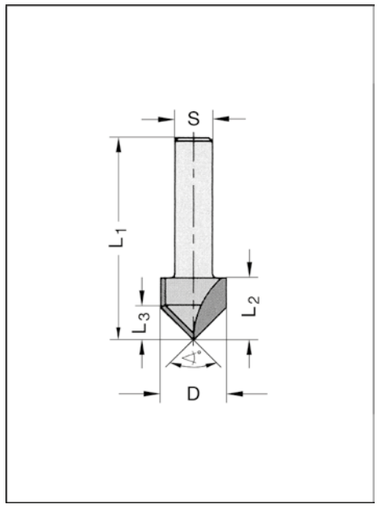

24260-5

D mm	L_2 mm	L_3 mm	Angle	L_1 mm	Shank mm	Part-No.
14	13,5	7	90°	43,5	6	24261-5-14090-R
14	13,5	7	90°	43,5	6,35	24262-5-14090-R
14	13,5	7	90°	43,5	8	24263-5-14090-R

Technical details
Two TCT cutting edges, cutting on bottom and periphery. Right-hand rotation. For manual feed.

Application
For V-grooves, decorative grooves, lettering or for bevelling of hardwood, various kinds of wood composites and boards.

V-Grooving/Bevelling Cutters TCT Z1

interch. shank design

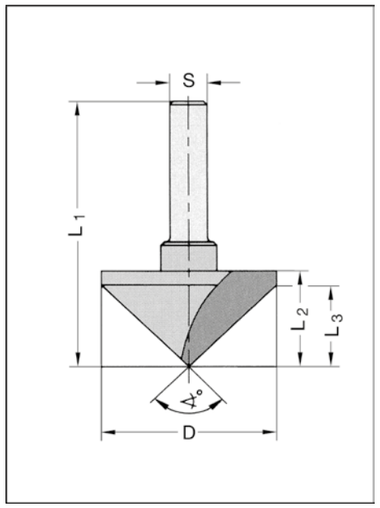

24260-40

D mm	L_2 mm	L_3 mm	Angle	L_1 mm	Shank mm	Part-No.
40	21,5	20	90°	61,5	8	24263-5-40045-R
40	21,5	20	90°	61,5	10	24265-5-40045-R
40	21,5	20	90°	61,5	12	24266-5-40045-R
Internal thread						
40	21,5	20	90°	51,5	M 10	24267-5-40045-R
40	21,5	20	90°	51,5	M 12 x 1	24268-5-40045-R

Technical details
One TCT cutting edge. Precise centre point on bottom. Right-hand rotation. For manual feed.

Application
For V-grooving, decorative grooving and bevelling of solid wood and various kinds of wood composites and boards. Also applicable for mitre folding.

Decorative Groove Cutter w. reversible TC tip Z1

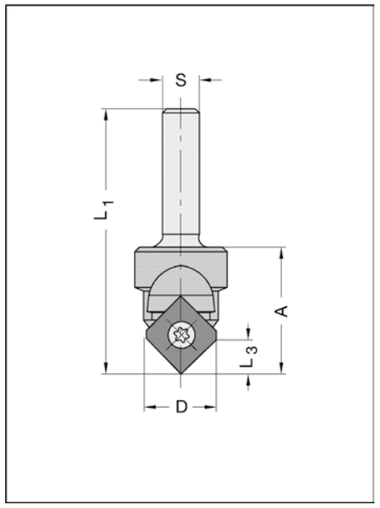

22193

D mm	L_3 mm	A mm	L_1 mm	Shank mm	Part-No.
Basic tool body with tip No. 1					
15,9	7,5	27	57,5	8 x 30	22193-5-15900-R
Set in wooden case, consisting of:					
Tool body	with	altogether	7	tips*	22193-5-00000-R

Technical details
Technical tool body, supplied with 1 reversible tip for profile No. 1 as basic equipment. TC tip with shear cut from top to bottom. The basic tip can be profiled on one side. Maximum depth of profile according to illustration below. Right-hand rotation. For manual feed.

Application
For decorative grooving, lettering and engraving, etc.

Quantity discounts, ordering same profile: 5 - 9 pcs. = 12 %, up from 10 pcs. = 25 %
Template costs: see page 7.32

Spare parts / Accessories		Part-No.
Interch. TC tip	12 x 12 x 1,5 mm, for profile No. 1	72190-6-00001-R
Interch. TC tip	12 x 12 x 1,5 mm, for profile Nos. 2/3/4	72190-6-00004-R
Interch. TC tip	12 x 12 x 1,5 mm, for profile No. 5	72190-6-00005-R
Interch. TC tip	12 x 12 x 1,5 mm, for profile Nos. 6/7/8	72190-6-00008-R
Interch. TC tip	12 x 12 x 1,5 mm, for profile No. 9	72190-6-00009-R
Interch. TC tip	12 x 12 x 1,5 mm, for profile No. 10	72190-6-00010-R
Interch. TC tip	12 x 12 x 1,5 mm, for profile No. 11	72190-6-00011-R
Interch. TC tip	12 x 12 x 1,5 mm, for profile No. 12	72190-6-00012-R
Special profiles	up to D = 15,9 mm	72190-6-15900-R
Torx clamping screw	M 4 x 4,8 T15	39081-0-04048-R
Torx key	T15, with flag	39077-0-04015-1

*** Set, consisting of:**
1 pc. Decorative groove cutter with tip No. 1
1 pc. Profile tip f. profiles Nos. 2/3/4
1 pc. Profile tip f. profile No. 5
1 pc. Profile tip f. profiles Nos. 6/7/8
1 pc. Profile tip f. profile No. 10
1 pc. Profile tip f. profile No. 11
1 pc. Profile tip f. profile No. 12
1 pc. TORX key with flag T15
1 pc. TORX clamping screw

Basic equipment:

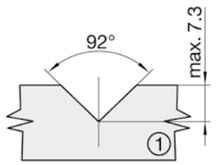

Area available for profiling (1:1)

Standard profiles:

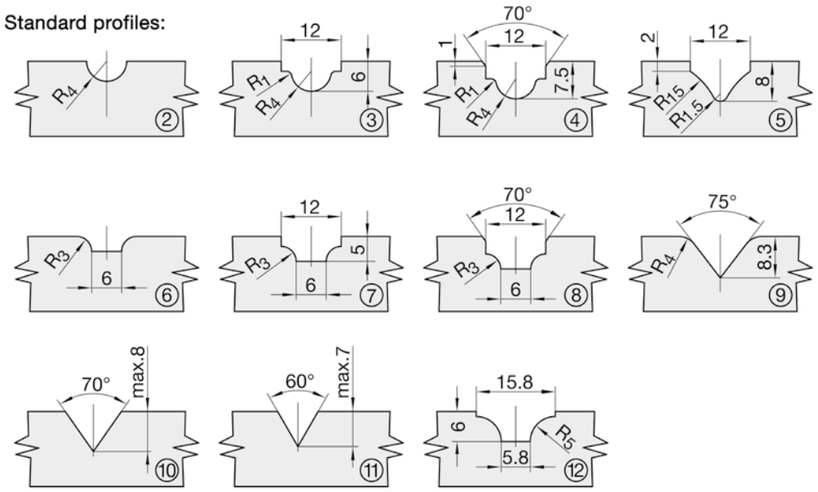

Bevel Cutters TCT Z2

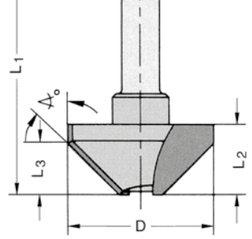

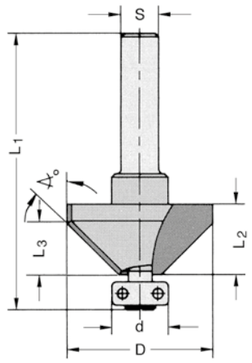

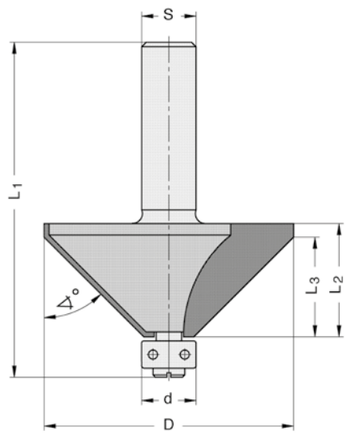

24550-5 without guide

D mm	L_2 mm	L_3 mm	Angle	L_1 mm	Shank mm	Part-No.
Interchangeable shank design						
21,7	20	19	15°	60	8	24553-5-00015-R
21,7	20	19	15°	60	10	24555-5-00015-R
21,7	20	19	15°	60	12	24556-5-00015-R
34	20	19	30°	60	8	24553-5-00030-R
34	20	19	30°	60	10	24555-5-00030-R
34	20	19	30°	60	12	24556-5-00030-R
31	15	10	45°	50	6	24551-5-30045-R
31	15	10	45°	55	8	24553-5-30045-R
31	15	10	45°	55	10	24555-5-30045-R
31	15	10	45°	55	12	24556-5-30045-R

24560-5 with interchangeable ball bearing guide set

D mm	L_2 mm	L_3 mm	Angle	d mm	L_1 mm	Shank mm	Part-No.
Interchangeable shank design							
21,7	20	19	15°	12	65	6	24561-5-00015-R
21,7	20	19	15°	12	70	8	24563-5-00015-R
21,7	20	19	15°	12	70	10	24565-5-00015-R
21,7	20	19	15°	12	70	12	24566-5-00015-R
34	20	19	30°	12	65	6	24561-5-00030-R
34	20	19	30°	12	70	8	24563-5-00030-R
34	20	19	30°	12	70	10	24565-5-00030-R
34	20	19	30°	12	70	12	24566-5-00030-R
31	15	10	45°	12	60	6	24561-5-30045-R
31	15	10	45°	12	65	8	24563-5-30045-R
31	15	10	45°	12	65	10	24565-5-30045-R
31	15	10	45°	12	65	12	24566-5-30045-R

Also available with internal thread M 10 and M 12 x 1.

If required the ball bearing guide set can be removed and replaced by a covering screw.

PCD bevel cutters see type 11000 on page 1.54.

24106-5 with interchangeable ball bearing guide set

D mm	L_2 mm	L_3 mm	Angle	d mm	L_1 mm	Shank mm	Part-No.
One-piece design							
55	25	21,5	45°	12	74	12	24106-5-55045-R

Technical details
Two TCT cutting edges, cutting on bottom and periphery.
No. 24560 and No. 24106 with interchangeable ball bearing guide set. Right-hand rotation.
For manual feed.

Application
For machining solid wood and panel materials.

Spare parts / Accessories		Part-No.
Guide set	12 mm ø, complete	39064-0-09012-R
Covering screw	M 3,5 x 6,0 mm	39052-0-03500-R

Tools for Portable Routers

Bevel Cutters TCT Z2

with ball bearing guide

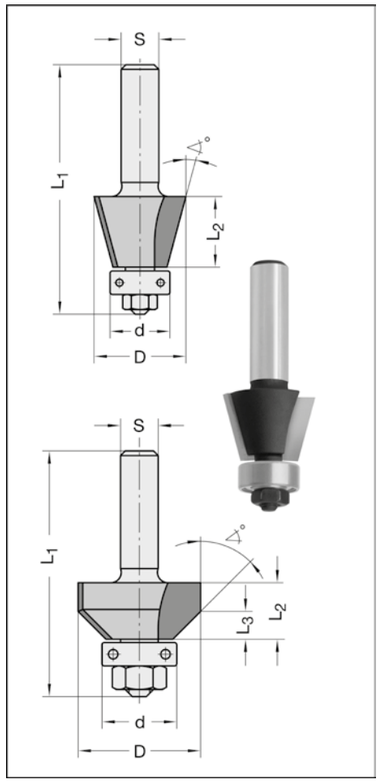

24100

D mm	L_2 mm	L_3 mm	Angle	d mm	L_1 mm	Shank mm	Part-No.
19,5	14	-	15°	12,7	56	8	24103-5-19515-R
26	12	-	15°	21	54	8	24103-5-26015-R
26	12	-	30°	15,9	52	8	24103-5-26030-R
25	12	6	45°	15,9	52	6	24101-5-25045-R
25	12	6	45°	15,9	52	8	24103-5-25045-R
30	15	10	45°	12,7	53	6	24101-5-30045-R
30	15	10	45°	12,7	53	6,35	24102-5-30045-R
30	15	10	45°	12,7	53	8	24103-5-30045-R

PCD bevel cutters see type 11000 on page 1.54.

Technical details
Two TCT cutting edges, cutting on periphery only, with interchangeable ball bearing. Right-hand rotation. For manual feed.

Application
For machining solid wood and panel materials.

Spare parts / Accessories		Part-No.
Ball bearing	12,7 mm ø, d= 4,76 mm	39050-0-12700-0
Ball bearing	15,9 mm ø, d= 6,35 mm	39050-0-15900-0
Ball bearing	15,9 mm ø, with ring 21 mm ø	39061-0-15921-0
Hexagon nut	M 4, for ø 12,7 mm	39150-0-04000-R
Hexagon nut	M 6, for ø 15,9/21 mm	39150-0-06000-R

Bevel Cutters TCT Z2

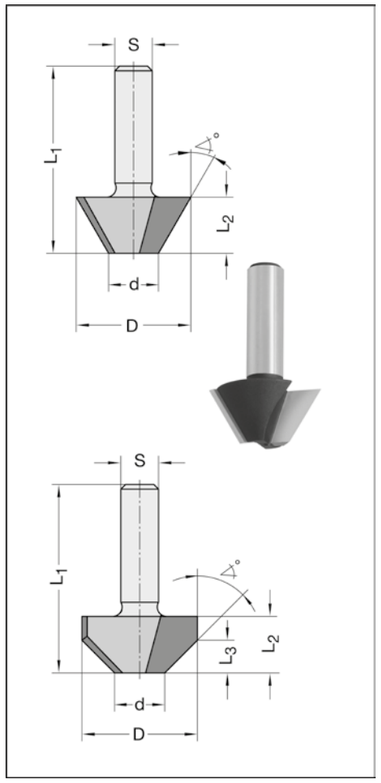

24290

D mm	L_2 mm	L_3 mm	Angle	d mm	L_1 mm	Shank mm	Part-No.
24	12	-	30°	10,1	40	8	24293-5-24030-R
24	12	7	45°	10	40	8	24293-5-24045-R

Technical details
Two TCT cutting edges, cutting on periphery only. Right-hand rotation. For manual feed.

Application
For machining solid wood and panel materials.

Bevel Trimming Cutters TCT Z2

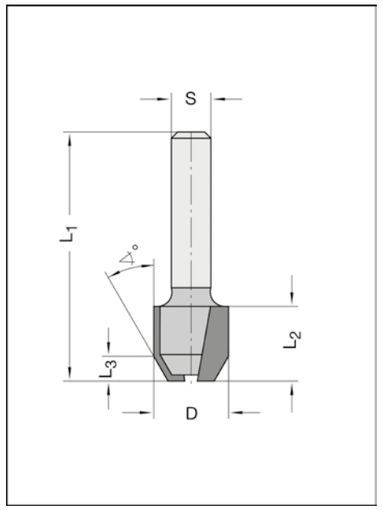

24280

D mm	L_2 mm	L_3 mm	Angle	L_1 mm	Shank mm	Part-No.
12	12	4	22°	40	8	24283-5-12022-R
12	12	4	30°	40	6	24281-5-12030-R
12	12	4	30°	40	6,35	24282-5-12030-R
12	12	4	45°	40	6,35	24282-5-12045-R

Technical details
Two TCT cutting edges, cutting on periphery. Right-hand rotation. For manual feed.

Application
For machining solid wood and panel materials.

Bevel Cutter TCT Z2

Corian / Varicor

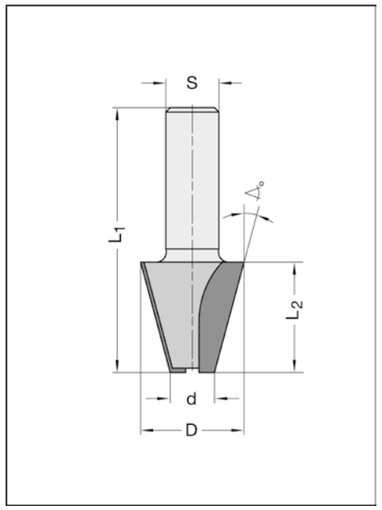

24796-02

D mm	L_2 mm	Angle	d mm	L_1 mm	Shank mm	Part-No.
23,4	25	15°	10	70	12 x 30	24796-5-00002-R

Technical details
Two TCT cutting edges, cutting on bottom and periphery. Right-hand rotation. For manual feed.

Application
Especially for machining Corian- and Varicor-boards.

For bevelling 15° on Corian- and Varicor boards for flush or stepped inserting of the formed components ("cone integration"). Gradation through height adjustment of the router cutter.

Also applicable for bevelling and trimming of hardwood and panel materials.

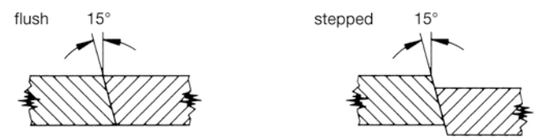

Bevel Trimming Cutter TCT Z3

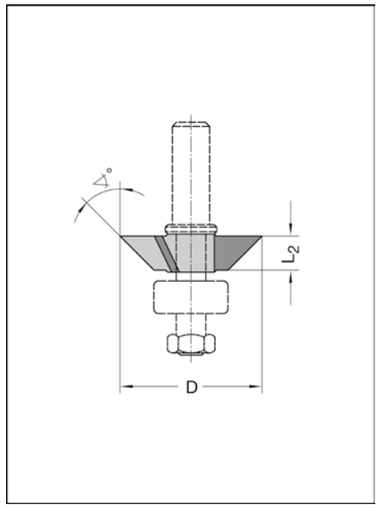

24460-5

D mm	L_2 mm	Angle	Bore mm	Part-No.
30,5	7,3	45°	6,35	24460-5-00045-R

Technical details
Three TCT cutting edges, cutting on periphery only. To use togehter with arbor No. 24440 page 1.31.
Right-hand rotation. For manual feed.

Application
For machining solid wood and panel materials.

Square Trimming Cutters TCT Z2

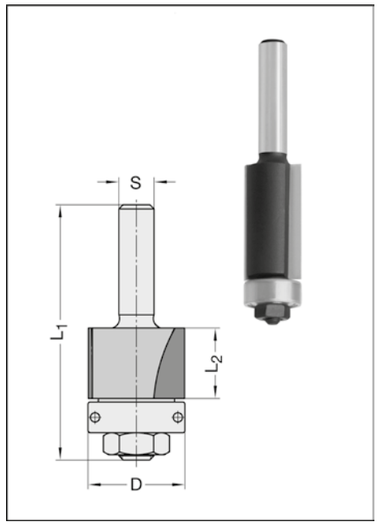

24050 with ball bearing guide

D mm	L_2 mm	L_1 mm	Shank mm	Part-No.
12,7	12	50	6	24051-5-12700-R
12,7	12	50	8	24053-5-12700-R
12,7	25	63	6	24051-5-12725-R
12,7	25	63	6,35	24052-5-12725-R
12,7	25	63	8	24053-5-12725-R
22	16	58	8	24053-5-22000-R

PCD trimming cutters see type 11000 on page 1.54.

Technical details
Two straight TCT edges, cutting on periphery, with interchangeable ball bearing. Right-hand rotation.
For manual feed.

Application
For copying with template as well as for trimming of plastic and veneer edges.

Spare parts / Accessories		Part-No.
Ball bearing	12,7 mm ø, d= 4,76 mm	39050-0-12700-0
Ball bearing	22 mm ø, d= 8,0 mm, up from middle 1997	39050-0-22008-0
Ball bearing	15,9 mm ø, d= 6,35 mm with ring 22 mm ø, up to middle 1997	39061-0-15922-0
Hexagon nut	M 6, for ø 22 mm	39150-0-06000-R
Hexagon nut	M 4, for ø 12,7 mm	39150-0-04000-R

Trimming and Copying Cutters TCT Z2

interch. shank design

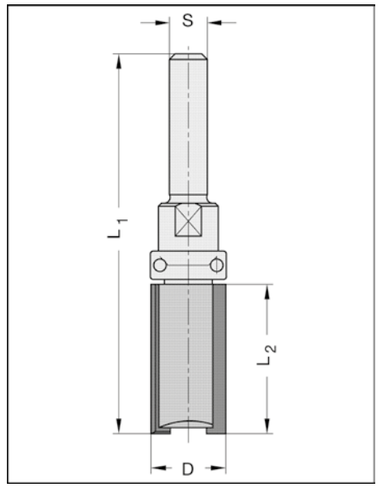

24060 ball bearing guide on shank-side

D mm	L_2 mm	L_1 mm	Shank mm	Part-No.
12,7	25	66	6	24061-5-12725-R
12,7	25	66	6,35	24062-5-12725-R
12,7	25	71	8	24063-5-12725-R
19	50	97	12	24066-5-19050-R
Internal thread				
19	50	87	M 10	24067-5-19050-R
19	50	87	M 12 x 1	24068-5-19050-R

Technical details
Two straight TCT cutting edges, cutting on bottom and periphery, with interchangeable ball bearing and shank.
Right-hand rotation. For manual feed.

Application
For copying with template, as well as for trimming of plastic and veneer edges, sizing, rebating.

Spare parts / Accessories		Part-No.
Ball bearing	12,7 mm ø, d= 6,35 mm	39050-0-12702-0
Ball bearing	19 mm ø, d= 8,0 mm	39050-0-19008-0

Tools for Portable Routers

Double Edge Trimming Cutters w.rev.TC tips Z2

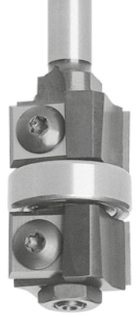

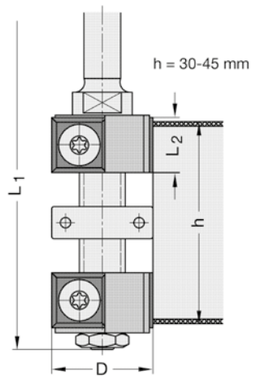

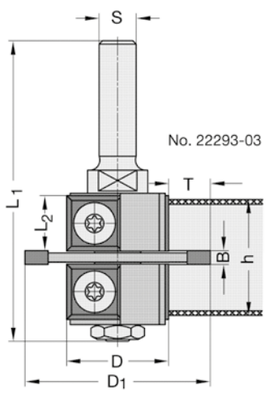

22293

D mm	L_2 mm	for size	h mm	L_1 mm	Shank mm	Part-No.
22	12	1	12 - 30	70	8 x 25	22293-5-22001-R
22	12	2	30 - 45	84	8 x 25	22293-5-22002-R

Technical details
Multi-piece cutter set, consisting of one top and one bottom trimming cutter, each with two 4-sided TC tips, with **alternative shear angle.** With interchangeable ball bearing. Right-hand rotation. For manual feed.

Application
For simultaneous edge trimming of top and bottom laminate or veneer edges. Increased tool life through readjustment in axial direction.

Spare parts / Accessories		Part-No.
Top edge jointing cutter	Size 1, 22 x 12 mm, shank 8 mm	22293-5-22001-1
Top edge jointing cutter	Size 2, 22 x 12 mm, shank 8 mm	22293-5-22002-1
Bottom jointing cutter	22 x 12 x 6 mm	22293-5-22001-2
Interch. TC tip	12 x 12 x 1,5 mm, 4-sided	72014-6-01201-0
Ball bearing	22 mm ø, d= 8,0 mm	39050-0-22008-0
Spacer	13 x 7 x 8 mm	39545-0-13070-0
Hexagon nut	M 6, ISO 4035, small	39150-0-06001-R
Torx clamping screw	M 4 x 5,9, T15	39076-0-04000-R
Torx key	T15, with flag	39077-0-04015-1

22293-03

D mm	D_1 mm	T_{max} mm	B mm	$h_{max.}$ mm	L_1 mm	Shank mm	Part-No.
22	40	9	2,5	25	65	8 x 25	22293-5-22025-R
22	40	9	3,0	25	65	8 x 25	22293-5-22030-R
22	40	9	4,0	26	65	8 x 25	22293-5-22040-R

Technical details
Multi-piece cutter set, consisting of one top and one bottom trimming cutter, each with two 4-sided TC tips, with **alternative shear angle.** With interchangeable grooving cutter in different cutting width (see also page 1.30). Right-hand rotation. For manual feed.

Application
For edge trimming of plastic laminated or veneered edges and simultaneous grooving.
Also applicable for solid wood and all kinds of panel materials.

Spare parts / Accessories		Part-No.
Bottom jointing cutter	22 x 12 x 6 mm, shank 8 mm	22293-5-22001-2
Grooving saw TCT	40 x 2,5 x 6 mm	24151-5-40025-0
Grooving saw TCT	40 x 3,0 x 6 mm	24151-5-40030-0
Grooving saw TCT	40 x 4,0 x 6 mm	24151-5-40040-0
Interch. TC tip	12 x 12 x 1,5 mm, 4-sided	72014-6-01201-0
Hexagon nut	M 6, ISO 4035, small	39150-0-06001-R
Torx clamping screw	M 3,5 x 4 extra-large head, T15	39076-0-03500-R
Torx key	T15, with flag	39077-0-04015-1

Trimming and Copying Cutters w. rev. TC tip Z1

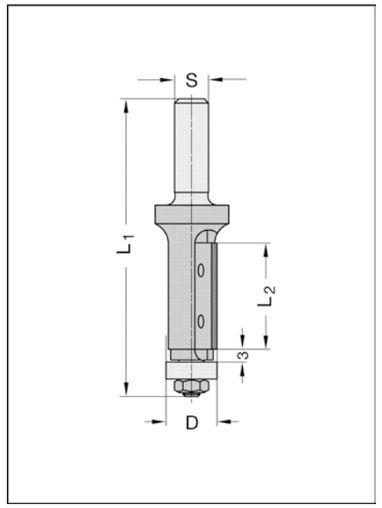

22270 with ball bearing guide

D mm	L_2 mm	L_1 mm	Shank mm	Part-No.
12	25	70	6	22271-5-12000-R
12	25	70	8	22273-5-12000-R

PCD trimming cutter type 11000 see page 1.54.

Technical details
With one straight reversible TC tip, clamping of tip with clamping wedge. Cutter body with balancing collar and interchangeable ball bearing. Right-hand rotation. For manual feed.

Application
For trimming of plastic and veneer edges, sizing and copying.

Spare parts / Accessories		Part-No.
Reversible TC tip	25 x 5,5 x 1,1 mm, 4-sided	72013-6-25055-0
Clamping wedge	12 x 25 mm	39340-0-00025-0
Ball bearing	12 x 4 mm, d= 4 mm	39050-0-12000-0
Torx clamping screw	M 3 x 7,0, T 8	39080-0-30701-R
Torx key	T 8, with flag	39077-0-03008-1
Hexagon nut	M 4	39150-0-04000-R

Square Trimming Cutters w. rev. TC tips Z2

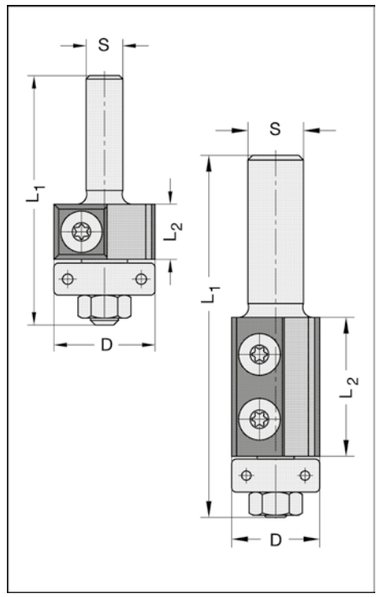

22220 with ball-bearing guide

D mm	L_2 mm	L_1 mm	Shank mm	Part-No.
22	12	54	8	22223-5-22012-R
22	20	62	8	22223-5-22020-R
19	30	75	8	22223-5-19030-R
19	30	75	12	22226-5-19030-R
19	50	95	12	22226-5-19050-R

PCD trimming cutter type 11000 see page 1.54.

Technical details
With two straight reversible TC tips, cutting on periphery, with interchangeable ball bearing. Right-hand rotation. For manual feed.

Application
For trimming of plastic and veneer edges, sizing and copying.

Spare parts / Accessories		Part-No.
Interch. TC tip	12 x 12 x 1,5 mm, 4-sided	72014-6-01201-0
Reversible TC tip	20 x 12 x 1,5 mm, 2-sided	72010-6-02001-0
Reversible TC tip	30 x 12 x 1,5 mm, 2-sided	72010-6-03001-0
Reversible TC tip	50 x 12 x 1,7 mm, 4-sided, 3-hole-design	72016-6-05017-0
Ball bearing	19 mm ø, d= 6,35 mm	39050-0-19000-0
Ball bearing	22 mm ø, d= 7,0 mm	39050-0-22000-0
Torx clamping screw	M 4 x 5,9, T15	39076-0-04000-R
Torx key	T15, with flag	39077-0-04015-1
Torx key	T15, with handle	39077-0-04015-2
Hexagon nut	M 6	39150-0-06000-R

Square Trimming Cutters w. rev. TC tips Z2

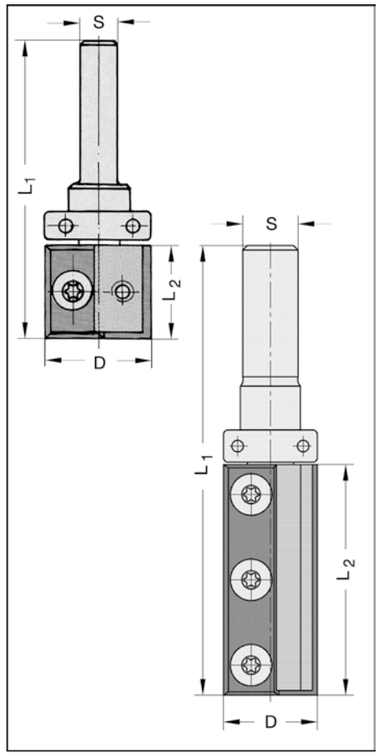

22200 ball bearing guide on shank-side

D mm	L_2 mm	L_1 mm	Shank mm	Part-No.
22	20	63	6	22201-5-22020-R
22	20	63	6,35	22202-5-22020-R
22	20	68	8	22203-5-22020-R
22	30	76,5	12	22206-5-22030-R
22	30	86,5	12,7	22209-5-22030-R
22	50	95,5	12	22206-5-22050-R
22	50	106,5	12,7	22209-5-22050-R
Internal thread				
22	30	66,5	M 10	22207-5-22030-R
22	50	86,5	M 10	22207-5-22050-R
22	30	66,5	M 12 x 1	22208-5-22030-R
22	50	86,5	M 12 x 1	22208-5-22050-R

Technical details
With two straight reversible TC tips, 4-sided, cutting on bottom and periphery. With interchangeable ball bearing on shank-side. Right-hand rotation. For manual feed.
For safety reasons the shank diameter for L2 = 30 and 50 mm must not be smaller than ø 12 mm.

Application
For square trimming of plastic laminated or veneered edges, jointing, rebating cuts of any depth desired, copy routing with the template attached on the upper side of the workpiece.

Spare parts / Accessories		Part-No.
Reversible TC tip	20 x 12 x 1,5 mm, 4-sided	72014-6-02000-0
Reversible TC tip	30 x 12 x 1,5 mm, 4-sided	72014-6-03000-0
Reversible TC tip	50 x 12 x 1,7 mm, 4-sided, 3-hole-design	72016-6-05017-0
Ball bearing	22 mm ø, d= 8,0 mm	39050-0-22008-0
Torx clamping screw	M 4 x 5,9, T15	39076-0-04000-R
Torx key	T15, with flag	39077-0-04015-1
Torx key	T15, with handle	39077-0-04015-2

Inlay Trimming Cutter w. rev. TC tips Z2

Corian / Varicor

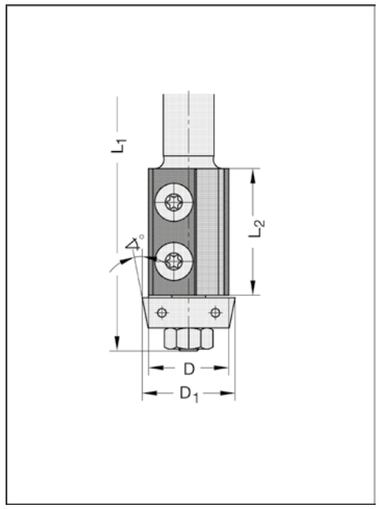

22226

D mm	L_2 mm	D_1 mm	Angle	L_1 mm	Shank mm	Part-No.
19	30	22	11°	78	12 x 35	22226-5-19030-B

PCD trimming cutters see type 11000 on page 1.54.

Technical details
With two straight reversible TC tips, cutting on periphery, with synthetic coated ball bearing. Right-hand rotation. For manual feed.

Application
Especially for machining Corian- and Varicor boards. For trimming overhanging countertops on undermount bowls.

Spare parts / Accessories		Part-No.
Reversible TC tip	30 x 12 x 1,5 mm, 2-sided, HW 02	72010-6-03001-0
Ball bearing	19 mm ø, d=6,35 mm, synthetic coated	39050-0-19000-K
Ball bearing	22 mm ø, d=6,35 mm, 11°, synthetic coated	39050-0-22011-K
Torx clamping screw	M 4 x 5,9, T15	39076-0-04000-R
Torx key	T15, with flag	39077-0-04015-1
Hexagon nut	M 6	39150-0-06000-R

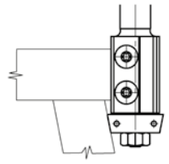

Trimming Cutters w. rev. TC tips Z2

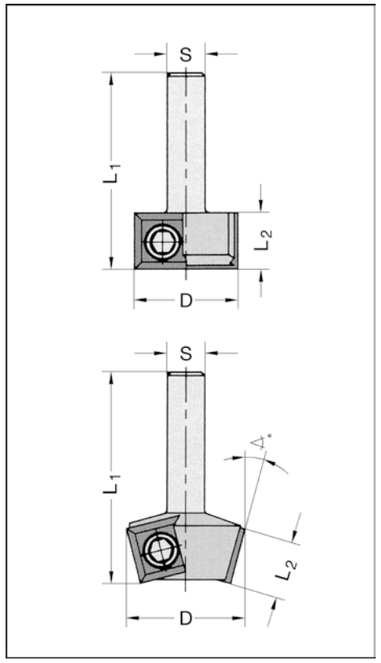

22210 Square trimming and rebating cutter

D mm	L_2 mm	L_1 mm	Shank mm	Part-No.
22	12	60	6	22211-5-22012-R

22230 Bevel trimming cutters

D mm	L_2 mm	Angle	L_1 mm	Shank mm	Part-No.
27	12	15°	44	8	22233-5-27015-R
29	12	45°	46	8	22233-5-29045-R

Technical details
With two reversible TC tips, 4-sided, cutting on bottom and periphery. Right-hand rotation. For manual feed.

Application
For trimming of plastic and veneer edges, for rebating (No. 22210) or bevelling (No. 22230).

Spare parts / Accessories		Part-No.
Interch. TC tip	12 x 12 x 1,5 mm, 4-sided	72014-6-01201-0
Torx clamping screw	M 4 x 5,9, extra-large head, T15	39076-0-04000-R
Torx key	T15, with flag	39077-0-04015-1
Torx key	T15, with handle	39077-0-04015-2

Bevel Trimming Cutters w. rev. TC tips Z2

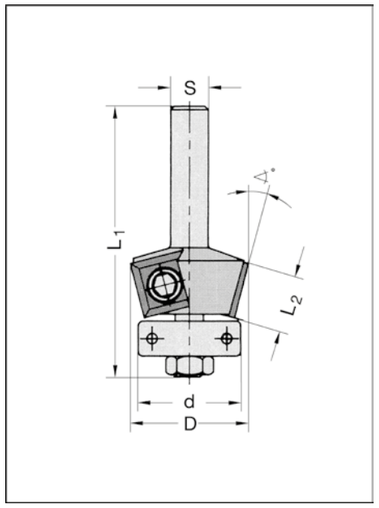

22240 with ball bearing guide

D mm	L_2 mm	d mm	Angle	L_1 mm	Shank mm	Part-No.
24	12	19	15°	60,3	8	22243-5-27015-R
30	12	19	30°	60,3	8	22243-5-30030-R
32	12	15,9	45°	60,3	6	22241-5-29045-R
32	12	15,9	45°	60,3	8	22243-5-29045-R

Technical details
With two reversible TC tips, 4-sided, cutting on periphery, with interchangeable ball bearing. Right-hand rotation. For manual feed.

Application
For machining solid wood and panel materials.

Spare parts / Accessories		Part-No.
Interch. TC tip	12 x 12 x 1,5 mm, 4-sided, HW 02	72014-6-01201-0
Ball bearing	15,9 mm ø, d= 6,35 mm	39050-0-15900-0
Ball bearing	19 mm ø, d= 6,35 mm	39050-0-19000-0
Hexagon nut	M 6, ISO 8673	39150-0-06000-R
Torx clamping screw	M 4 x 5,9, extra-large head, T15	39076-0-04000-R
Torx key	T15, with flag	39077-0-04015-1
Torx key	T15, with handle	39077-0-04015-2

UNITEC Rebating Cutters w. rev. TC tips Z2

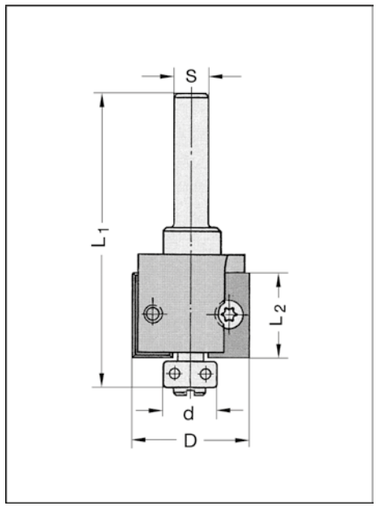

22110 interchangeable shank design

D mm	L_2 mm	d mm	L_1 mm	Shank mm	Part-No.
26	19,5	9	71	8	22113-5-26009-R
26	19,5	9	71	12	22116-5-26009-R
32	26	12	77,5	8	22113-5-32012-R
32	26	12	77,5	12	22116-5-32012-R

Technical details
With two reversible TC tips, cutting on bottom and periphery, with shear angle. Right-hand rotation. For manual feed. If required, the ball bearing guide set can be removed and be replaced by a covering screw.

Application
For trimming and rebating of hardwood, softwood, wood composites and panel materials on stationary and portable routers.
Rebating tips[1)] also applicable for use in mechanical feed (Unitec Universal Cutter No. 22140-0, page 1.42).

Spare parts / Accessories		Part-No.
Rebating tip, TC[1)]	19,4 x 9 x 1,5 mm, 4-sided	72142-6-19500-0
Rebating tip, TC[1)]	26 x 12,5 x 1,5 mm, 4-sided	72142-6-26000-0
Rebating tip, TC[1)]	30 x 14,5 x 1,5 mm, 4-sided	72142-6-30000-0
Guide set	9 mm ø, complete	39064-0-09000-R
Guide set	12 mm ø, complete	39064-0-09012-R
Guide set	16 mm ø, complete	39064-0-09016-R
Torx clamping screw	M 4 x 6, T15, for D= 26 mm	39081-0-04060-R
Torx clamping screw	M 4 x 5,9, extra-large head, T15, for D=32/36 mm	39076-0-04000-R
Covering screw	M 3,5 x 6,0 mm	39052-0-03500-R
Torx key	T15, with flag	39077-0-04015-1

For further ball bearing guide sets see page 7.28.

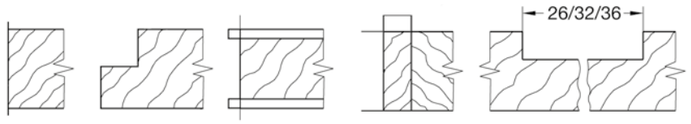

Rebating Cutters TCT Z2

interchangeable shank design

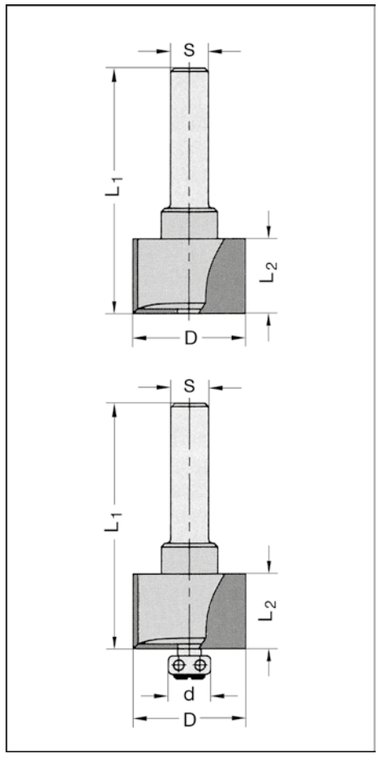

24520-5 without ball bearing guide

D mm	L_2 mm	L_1 mm	Shank mm	Part-No.
24	16	56	6	24521-5-24000-R
24	16	56	8	24523-5-24000-R
24	16	56	10	24525-5-24000-R
24	16	56	12	24526-5-24000-R
31	16	56	6	24521-5-31000-R
31	16	56	8	24523-5-31000-R
31	16	56	10	24525-5-31000-R
31	16	56	12	24526-5-31000-R

24530-5 with interchangeable ball bearing guide set

D mm	L_2 mm	d mm	L_1 mm	Shank mm	Part-No.
24	16	9	64	6	24531-5-24090-R
24	16	9	64	6,35	24532-5-24090-R
24	16	9	64	8	24533-5-24090-R
24	16	9	64	10	24535-5-24090-R
31	16	12	64	6	24531-5-31012-R
31	16	12	64	6,35	24532-5-31012-R
31	16	12	64	8	24533-5-31012-R
31	16	12	64	12	24536-5-31012-R

Technical details
Two straight TCT cutting edges, cutting on bottom and periphery.
No. 24530 with interchangeable ball bearing guide set. The guide set can be removed and replaced by a covering screw to get the model "wihtout guide set" . Right-hand rotation. For manual feed.

Application
For trimming of plastic and veneer edges and for rebating.

Spare parts / Accessories		Part-No.
Guide set	9 mm ø, complete	39064-0-09000-R
Guide set	12 mm ø, complete	39064-0-09012-R
Covering screw	M 3,5 x 6,0 mm	39052-0-03500-R

Further shank dimensions see page 1.53.
Guide sets ø 14 - 22 mm see page 7.28.

Rebating/Surfacing Cutter with rev. TC tips Z2

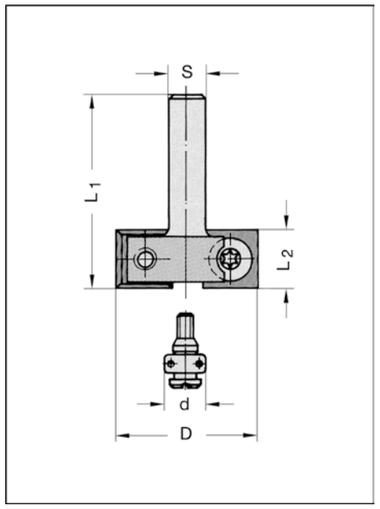

22250

D mm	L_2 mm	L_1 mm	Shank mm	Part-No.
30	12	39	8	22253-5-30000-R

Technical details
With two straight reversible TC tips, 4-sided, cutting on bottom and periphery. Right-hand rotation.
For manual feed.

Application
Without ball bearing guide set, with mounted covering screw, applicable for surfacing, square trimming of plastic edges or wooden edge bands, rebating in any depth desired.
With ball bearing guide set of 9 resp. 12 mm, for rebating depths of 10,5 resp. 9 mm.

Spare parts / Accessories		Part-No.
Interch. TC tip	12 x 12 x 1,5 mm, 4-sided	72014-6-01201-0
Torx clamping screw	M 4 x 5,9, T15	39076-0-04000-R
Torx key	T15, with flag	39077-0-04015-1
Covering screw	M 3,5 x 6,0 mm	39052-0-03500-R
Guide set	9 mm ø, complete (for rebating depth 10,5 mm)	39064-0-09000-R
Guide set	12 mm ø, complete (for rebating depth 9 mm)	39064-0-09012-R

Trimming and Surfacing Cutters TCT Z2

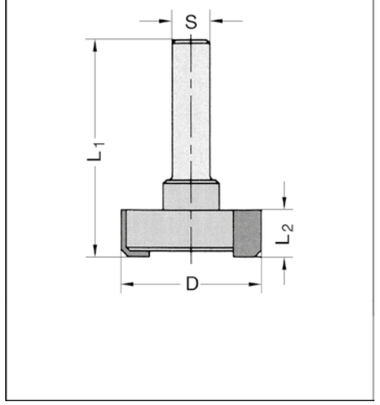

24510 interchangeable shank design

D mm	L_2 mm	L_1 mm	Shank mm	Part-No.
30	10	45	6	24511-5-30000-R
30	10	45	6,35	24512-5-30000-R
30	10	50	8	24513-5-30000-R
30	10	50	10	24515-5-30000-R
30	10	50	12	24516-5-30000-R
30	10	40	M 10	24517-5-30000-R
30	10	40	M 12 x 1	24518-5-30000-R

Technical details
Two TCT cutting egdes with side bevel. Right-hand rotation. For manual feed.

Application
For face milling of overlapping coatings, edge bandings, etc.

Trimming and Surfacing CuttersTCT Z6

Corian / Varicor

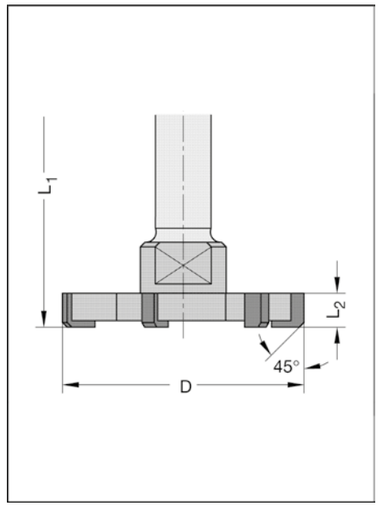

24796-11 interchangeable shank design

D mm	L_2 mm	L_1 mm	Shank mm	Part-No.
Cutter complete short design				
52	7,5	62	12 x 40	24796-5-50011-R
Cutter complete long design				
52	7,5	85	12 x 60	24796-5-50085-R
Interchangeable shank				
short	design		12 x 40	39526-0-50000-R
long	design		12 x 60	39526-0-85000-R

Technical details
Six TCT cutting edges, with side bevel, threaded bore for special interchangeable shank. Right-hand rotation.
For manual feed.

Application
Especially for machining Corian- / Varicor boards.
For face milling of overlapping coatings, edge bandings, etc.

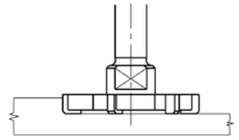

Stepped Cutters for closure fittings TCT Z2

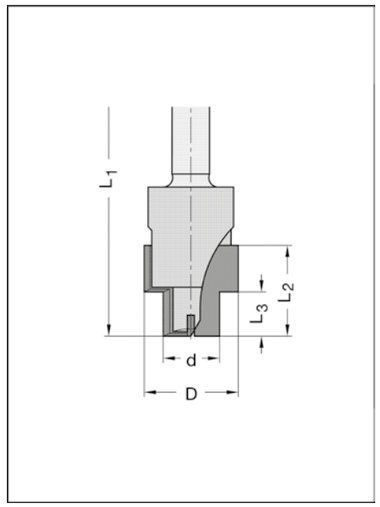

25540

D mm	d mm	L_3 mm	L_2 mm	L_1 mm	Shank mm	Part-No.
16,3	12,3	9,5	19,5	62	8	25543-5-16395-R
20,3	12,3	6	16	58	8	25543-5-20360-R
20,3	12,3	9,5	19,5	62	8	25543-5-20395-R

Technical details
Two straight TCT cutting edges, cutting on bottom and periphery, with TCT plunge tip. Right-hand rotation.
For manual feed.

Application
For cutting stepped grooves for closure fittings.

Slot Bits TCT

for FESTO - DOMINO

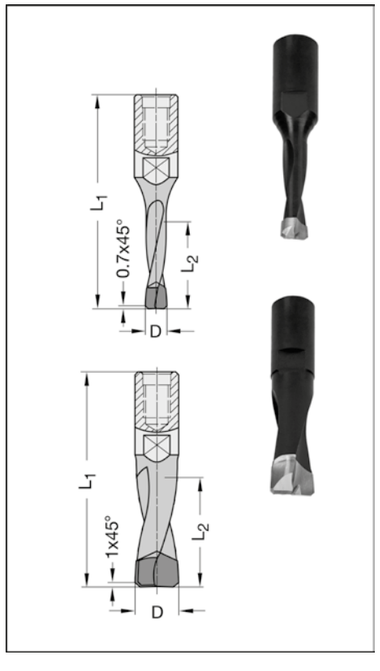

30025 internal thread

D mm	L_2 mm	L_1 mm	Shank mm	Part-No.
5	20	49	M 6 x 0,75	30025-5-05000-R
6	20	49	M 6 x 0,75	30025-5-06000-R
8	25	49	M 6 x 0,75	30025-5-08000-R
10	25	49	M 6 x 0,75	30025-5-10000-R

Technical details
Two cutting edges with ground side bevel, without centre point. Shank with internal thread and clamping flat.
Right-hand rotation.

Application
For use on FESTO-DOMINO-joining machines. Oscillating routing of long holes for Domino-dowels.

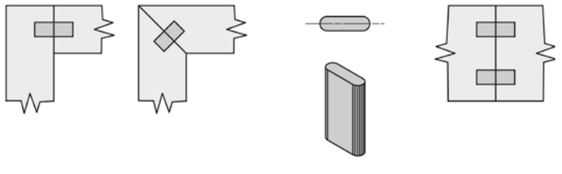

Laminate Floor Slotting Cutter Sets TCT Z2

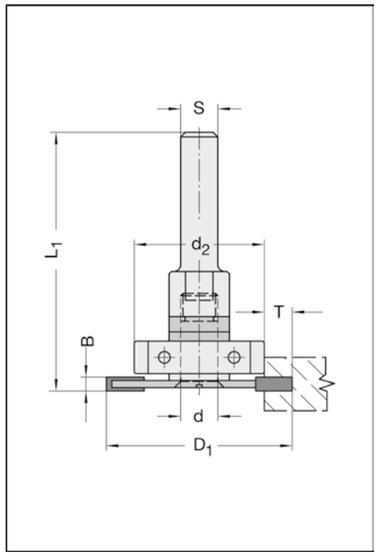

25163

D_1 mm	d_2 / d mm	T mm	B mm	L_1 mm	Shank mm	Part-No.
Compl. set						
40	28 / 8	6	2,5	54,5	8	25163-5-28025-R
40	28 / 8	6	2,8	54,8	8	25163-5-28028-R
40	32 / 8	4	2,5	54,5	8	25163-5-32025-R
40	32 / 8	4	2,8	54,8	8	25163-5-32028-R

Technical details
Cutter set consisting of interchangeable shank with tool holding fixture, set of spacers, ball bearing guide set with ring, TCT grooving saw Z= 2 with countersunk bore. Right-hand rotation. For manual feed.

Application
For pre-cutting of Laminat floor panels at repair or insert work.

Spare parts / Accessories		Part-No.
Grooving saw TCT	40 x 2,5 x 8 mm, w. countersunk bore	24153-5-40025-A
Grooving saw TCT	40 x 2,8 x 8 mm, w. countersunk bore	24153-5-40028-A
Grooving saw TCT	40 x 3,0 x 8 mm, w. countersunk bore	24153-5-40030-A
Grooving saw TCT	40 x 3,5 x 8 mm, w. countersunk bore	24153-5-40035-A
Ball bearing	22,0/28,0 mm ø, d= 8,0 mm	39062-0-22028-0
Ball bearing	22,0/32,0 mm ø, d= 8,0 mm	39062-0-22032-0
Interchangeable shank	S = 8 mm	39513-0-00000-R
Spacer	16 x 1 x 8 mm	39545-0-16010-0
Spacer	13 x 2 x 8 mm	39545-0-13020-0
Spacer	13 x 3 x 8 mm	39545-0-13030-0
Countersunk screw	M 8 x 20,7, d = 8 mm	39056-0-08207-R

Biscuit Slotting Cutter Set TCT Z2

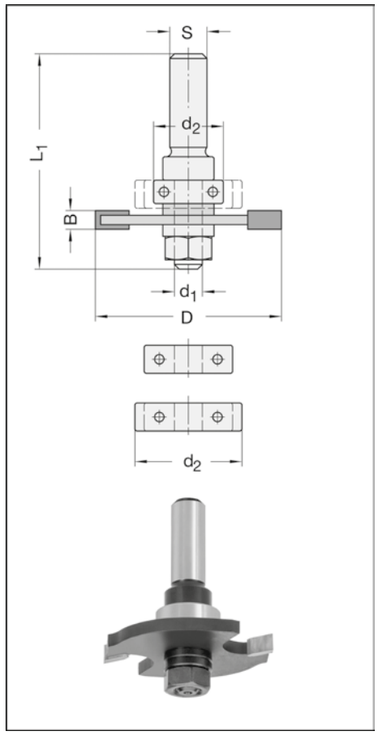

25173

D mm	d_2 mm	B mm	L_1 mm	d_1 mm	Shank mm	Part-No.
40	15/19/23	4	46	6	8	25173-5-40001-R

Technical details
Cutter set consisting of arbor, 3 ball bearings d_2 = 15/19/23 mm, TCT grooving saw and set of spacers, Z= 2.
Right-hand rotation. For manual feed.

Application
For grooving biscuit dowel joints on portable routers.

Spare parts / Accessories		Part-No.
Arbor	d_1 = 6 mm, with spacers, without ball bearing	24443-0-06000-R
Grooving saw TCT	40 x 4,0 x 6 mm	24151-5-40040-0
Ball bearing	15 mm ø, for biscuit No. 20 (=12,5 mm)	39050-0-15006-0
Ball bearing	19 mm ø, for biscuit No.10 (=10,5 mm)	39050-0-19006-0
Ball bearing	23 mm ø, for biscuit No. 0 (=8,5 mm)	39062-0-19023-0
Hexagon nut	¼" x 28 Gg.	39150-0-06300-R

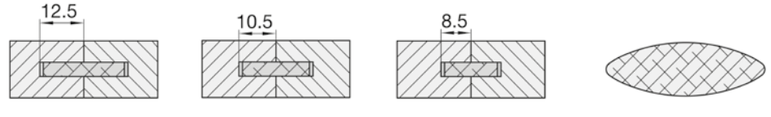

Weatherstrip Cutter Sets TCT Z2

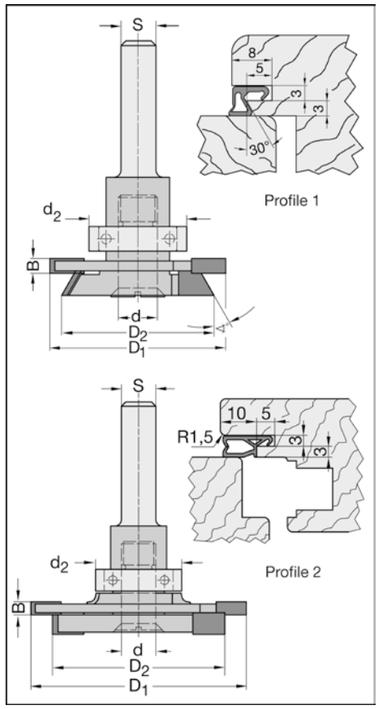

25180

D_1 mm	D_2 mm	B mm	d_2 mm	Shank mm	Part-No.
Profile 1, complete set					
36	31,2	3	20	8	25183-5-10000-R
36	31,2	3	20	12	25186-5-10000-R
Profile 2, complete set					
50	40	3	20	8	25183-5-20000-R
50	40	3	20	12	25186-5-20000-R

Technical details
Two-part cutter set Z=2 resp. Z= 2+2, TCT, assembled on arbor No. 24190 with ball bearing guide.
Right-hand rotation. For manual feed.

Application
For weatherstrip grooves on sound isolated windows with simultaneous bevelling resp. routnding.
Profile 1 for weatherstrips type e.g. Deventer SP33/SV33, profile 2 for Deventer SP 103/SV103b.
For use on portable routers.

Spare parts / Accessories		Part-No.
Grooving saw, TCT	36 x 3,0 x 8 mm, profile 1	24153-5-36030-0
Bevelling cutter, TCT	31,2 x 5 x 8 mm, profile 1	24183-5-31050-R
Profile cutter, TCT	50 x 3 / 5,5 x 8 mm, profile 2 top	24183-5-50030-R
Grooving saw, TCT	40 x 5,0 x 8 mm, profile 2 bottom	24153-5-40050-A
Ball bearing	16/20 mm ø, d= 8,0 mm	39061-0-16020-0
Arbor	d= 8 mm, w. ball bearing ø 20 mm, S= 8 mm	24193-0-08020-R
Arbor	d= 8 mm, w. ball bearing ø 20 mm, S= 12 mm	24196-0-08020-R
Countersunk screw	M 8 x 20,7, d = 8 mm	39056-0-08207-R

Tools for Portable Routers

Grooving Saws TCT Z2

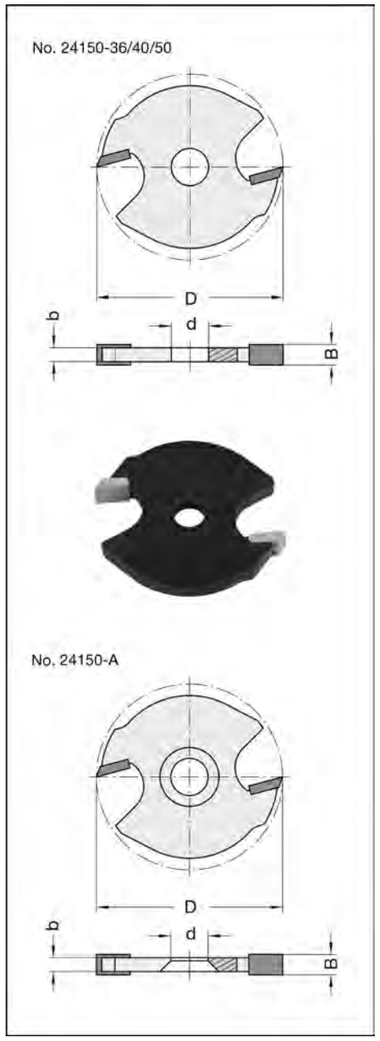

Technical details
Two straight TCT cutting edges, cutting on flank and periphery. With chip limitation. For manual feed.
No. 24150-A with countersunk bore for use on arbors No. 24190 (page 1.32).

Application
For grooving and slotting. Applicable on spindles resp. arbors No. 24160, 24170, 24190, 39440 and 24440 (pages 1.31 to 1.33).

24150-36

D mm	B mm	b mm	d mm	Part-No.
36	3,0	2,0	8	24153-5-36030-0

24150-40

D mm	B mm	b mm	d mm	Part-No.
40	1,5	1,0	6	24151-5-40015-0
40	1,5	1,0	8	24153-5-40015-0
40	1,8	1,0	6	24151-5-40018-0
40	2,0	1,5	6	24151-5-40020-0
40	2,0	1,5	6,35	24152-5-40020-0
40	2,0	1,5	8	24153-5-40020-0
40	2,2	1,5	6	24151-5-40022-0
40	2,2	1,5	8	24153-5-40022-0
40	2,5	1,5	6	24151-5-40025-0
40	2,5	1,5	6,35	24152-5-40025-0
40	2,5	1,5	8	24153-5-40025-0
40	2,8	2,0	6	24151-5-40028-0
40	2,8	2,0	8	24153-5-40028-0
40	3,0	2,0	6	24151-5-40030-0
40	3,0	2,0	6,35	24152-5-40030-0
40	3,0	2,0	8	24153-5-40030-0
40	3,5	2,0	6	24151-5-40035-0
40	3,5	2,0	6,35	24152-5-40035-0
40	3,5	2,0	8	24153-5-40035-0
40	4,0	3,0	6	24151-5-40040-0
40	4,0	3,0	6,35	24152-5-40040-0
40	4,0	3,0	8	24153-5-40040-0
40	5,0	4,0	6	24151-5-40050-0
40	5,0	4,0	6,35	24152-5-40050-0
40	5,0	4,0	8	24153-5-40050-0
40	6,0	4,0	6	24151-5-40060-0
40	6,0	4,0	6,35	24152-5-40060-0
40	6,0	4,0	8	24153-5-40060-0

24150-50

D mm	B mm	b mm	d mm	Part-No.
50	2,5	1,5	6	24151-5-50025-0
50	2,5	1,5	8	24153-5-50025-0
50	3,0	2,0	6	24151-5-50030-0
50	3,0	2,0	8	24153-5-50030-0
50	4,0	3,0	6	24151-5-50040-0
50	4,0	3,0	6,35	24152-5-50040-0
50	4,0	3,0	8	24153-5-50040-0

24150-A with countersunk

D mm	B mm	b mm	d mm	Part-No.
40	2,0	1,5	8	24153-5-40020-A
40	2,5	1,5	8	24153-5-40025-A
40	2,8	2,0	8	24153-5-40028-A
40	3,0	2,0	8	24153-5-40030-A
40	3,5	2,0	8	24153-5-40035-A
40	4,0	3,0	8	24153-5-40040-A
40	5,0	4,0	8	24153-5-40050-A

Arbors

with spacers

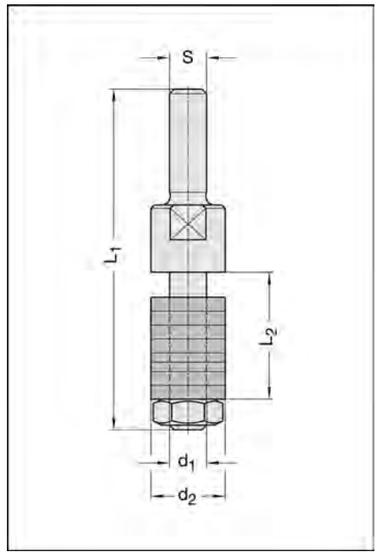

24160

d_1 mm	L_2 mm	d_2 mm	L_1 mm	Shank mm	Part-No.
6	6	16	54,5	8	24163-0-06000-R
8	6	16	54,5	8	24163-0-08000-R

39440

d_1 mm	L_2 mm	d_2 mm	L_1 mm	Shank mm	Part-No.
8	25	16	73,5	8	39443-0-08025-R

Technical details
Arbor complete with spacers. For right-hand rotation.

Application
For use with grooving saws, cutters with bore, ball bearings etc. with 6 or 8 mm bore diameter.

Spare parts / Accessories		Part-No.
Hexagon nut	M 6, for d_1 = 6/6,35 mm	39150-0-06000-R0
Hexagon nut	M 8, for d_1 = 8 mm	39150-0-08000-R

Arbors

with ball bearing guide

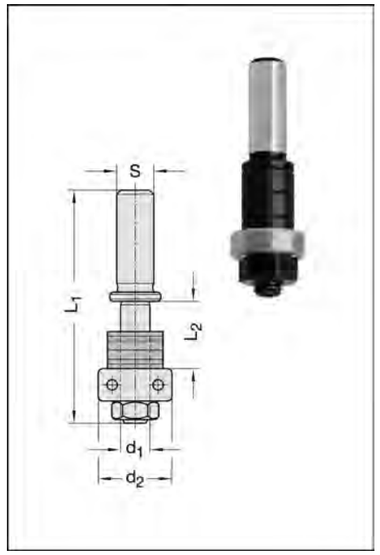

24440

d_1 mm	L_2 mm	d_2 mm	L_1 mm	Shank mm	Part-No.
6	12	15,0	46	8	24443-0-06001-R
6,35	20	15,9	50	6	24441-0-00635-R
6,35	20	15,9	50	6,35	24442-0-00635-R
6,35	20	15,9	50	8	24443-0-00635-R

Technical details
Arbor complete with a set of spacers and a ball bearing. For right-hand rotation.

Application
For use with grooving saws, cutters with bore etc. with 6 resp. 6,35 mm bore diameter.

Spare parts / Accessories		Part-No.
Ball bearing	15 mm ø, d= 6,0 mm	39050-0-15006-0
Ball bearing	15,9 mm ø, d= 6,35 mm	39050-0-15900-0
Hexagon nut	¼" x 28 Gg.	39150-0-06300-R

Arbors

interchangeable shank design

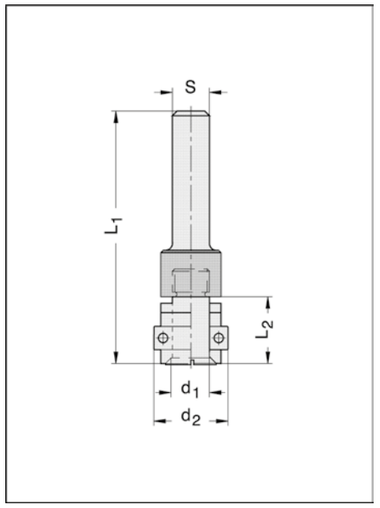

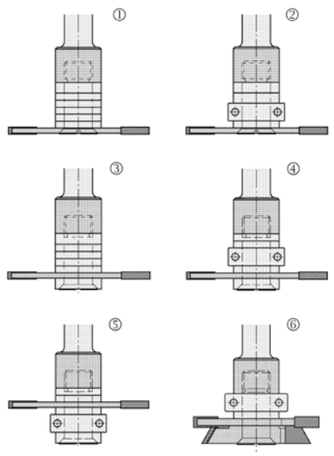

24190

d_1 mm	d_2 mm	L_2 mm	L_1 mm	Shank mm	Part-No.
With ball bearing and set of spacers					
8	16	15	50	6	24191-0-08016-R
8	16	15	55*	8	24193-0-08016-R
8	16	15	55	10	24195-0-08016-R
8	16	15	55	12	24196-0-08016-R
8	16	15	45	M 10	24197-0-08016-R
8	16	15	45	M 12 x 1	24198-0-08016-R
8	20	15	50	6	24191-0-08020-R
8	20	15	55*	8	24193-0-08020-R
8	20	15	55	10	24195-0-08020-R
8	20	15	55	12	24196-0-08020-R
8	20	15	45	M 10	24197-0-08020-R
8	20	15	45	M 12 x 1	24198-0-08020-R
Without ball bearing guide set, complete with set of spacers					
8		15	50	6	24191-0-08000-R
8		15	55	8	24193-0-08000-R
8		15	55	10	24195-0-08000-R
8		15	55	12	24196-0-08000-R
8		15	45	M 10	24197-0-08000-R
8		15	45	M 12 x 1	24198-0-08000-R

* Extension to 65 mm through interchangeable shank in extra length (see accessories).

Technical details
Arbor consisting of interchangeable standard shank, tool holding fixture and set of spacers.
Available with or without ball bearing. For right-hand rotation.

Application
To take grooving cutters, grooving saws and cutters with bore diameter 8 mm. (d1).
Suitable for all current portable routers through interchangeable shank system.
The tool holding fixture with set of spacers offers the following applications:

1. Flush screw head, when mounting grooving saws with countersunk bore
2. Same, but with ball bearing on shank side
3. Appliccation of grooving saw without countersunk bore and without ball bearing
4. Same, but with ball bearing on shank side
5. Same, but with ball bearing on bottom
6. With sealing cutter set No. 25180

Spare parts / Accessories		Part-No.
Tool holding fixture	d_1= 8 mm, without shank, with set of spacers and ball bearing 16 mm ø	24190-0-08016-R
Tool holding fixture	d_1= 8 mm, without shank, with set of spacers and ball bearing 16/20 mm ø	24190-0-08020-R
Tool holding fixture	d_1= 8 mm, without shank and ball- bearing, with set of spacers	24190-0-08000-R
Interchangeable shank	S= 8 mm, for L_1= 65 mm, extra length (without tool holding fixture)	39513-0-00050-R
Countersunk screw	M 8 x 20,7, d = 8 mm	39056-0-08207-R
Spacer	13 x 2 x 8 mm	39545-0-13020-0
Spacer	13 x 3 x 8 mm	39545-0-13030-0
Spacer	13 x 3 x 8 mm, with countersunk bore	39545-0-13030-A
Ball bearing	16 mm ø, d= 8,0 mm	39050-0-16008-0
Ball bearing	16 mm ø, with ring 20 mm ø, d= 8 mm	39061-0-16020-0

Grooving saws No. 24150 with or without countersunk bore ø 36 or 40 mm, see page 1.30.

Single interchangeable shanks see page 1.53.

Arbors

with ball bearing guide

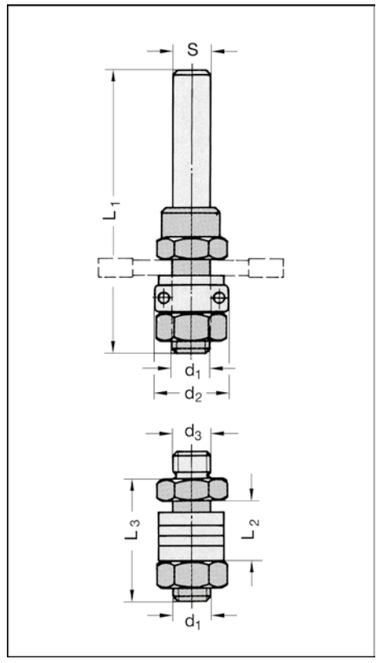

24170 interchangeable shank design

d_1 mm	d_2 mm	L_2 mm	L_3 mm	L_1 mm	Shank mm	Part-No.
6	16	12	25	57,5	6	24171-0-06001-R
6	16	12	25	62,5	8	24173-0-06001-R
8	16	12	26,5	59,5	6	24171-0-08001-R
8	16	12	26,5	64,5	8	24173-0-08001-R
8	16	12	26,5	64,5	12	24176-0-08001-R
Internal thread						
6	16	12	25	52,5	M 10	24177-0-06001-R
8	16	12	26,5	54,5	M 12 x 1	24178-0-08001-R

Technical details
Arbor consisting of standard interchangeable shanks and reducing adaptor with set of spacers and ball bearing guide set. Without ball bearing guide set on request.
Reducing adaptor on shank side with external thread (d3) M 8 x 1, suitable for all JSO interchangeable shanks.
For right-hand rotation.

Application
For use with grooving saws, cutters with bore etc. with bore diameter 6 or 8 mm.
Through interchangeable shank system applicable on all current portable routers. Possibility of additional adaption of the reducing adaptor to the bore size of the tool in each case.

Spare parts / Accessories		Part-No.
Reducing adaptor	d_1= 6 mm, with ball bearing (w. set of spacers and nut)	24170-0-06001-R
Reducing adaptor	d_1= 8 mm, with ball bearing (w. set of spacers and nut)	24170-0-08001-R
Reducing adaptor	d_1= 6 mm, without ball bearing (with set of spacers and nut)	24170-0-06000-R
Reducing adaptor	d_1= 8 mm, without ball bearing(with set of spacers and nut)	24170-0-08000-R
Ball bearing	15,9 mm ø, d= 6,35 mm	39050-0-15900-0
Ball bearing	16 mm ø, d= 6,0 mm	39050-0-16006-0
Ball bearing	16 mm ø, d= 8,0 mm	39050-0-16008-0
Hexagon nut	M 6, for d_1 6/6,35 mm	39150-0-06000-R
Hexagon nut	M 8, for d_1 = 8 mm	39150-0-08000-R

Core Box Cutters TCT Z2

one-piece design

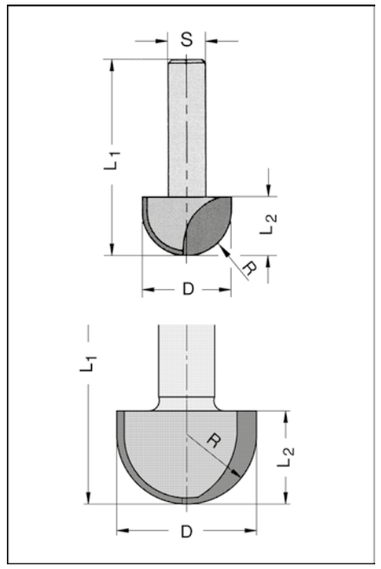

24340-5

D mm	R mm	L_2 mm	L_1 mm	Shank mm	Part-No.
8	4	5,5	36	6	24341-5-08000-R
8	4	5,5	60	8	24343-5-08000-R
9,5	4,75	6,3	65	6	24341-5-09565-R
9,5	4,75	6,3	60	8	24343-5-09500-R
11	5,5	8	60	8	24343-5-11000-R
12,7	6,35	9,5	60	6	24341-5-12700-R
12,7	6,35	9,5	60	8	24343-5-12700-R
30	15	20	60	12	24346-5-30000-R
40	20	25	65	12	24346-5-40000-R

Technical details
Two TCT cutting edges, cutting on bottom and periphery. Right-hand rotation. For manual feed.

Application
For cutting of solid wood and panel materials.

Tools for Portable Routers

Core Box Cutters TCT Z2

interchangeable shank design

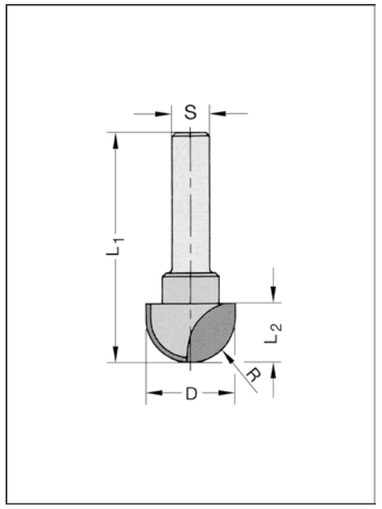

24580-5

D mm	R mm	L_2 mm	L_1 mm	Shank mm	Part-No.
16	8	11,2	46	6	24581-5-16080-R
16	8	11,2	46	6,35	24582-5-16080-R
16	8	11,2	51	8	24583-5-16080-R
16	8	11,2	51	10	24585-5-16080-R
19	9,5	12,7	48	6	24581-5-19095-R
19	9,5	12,7	48	6,35	24582-5-19095-R
19	9,5	12,7	53	8	24583-5-19095-R
19	9,5	12,7	53	10	24585-5-19095-R
25,4	12,7	15,9	51	6	24581-5-25412-R
25,4	12,7	15,9	51	6,35	24582-5-25412-R
25,4	12,7	15,9	56	8	24583-5-25412-R
25,4	12,7	15,9	56	10	24585-5-25412-R
Internal thread M 10					
16	8	11,2	41	M 10	24587-5-16080-R
19	9,5	12,7	43	M 10	24587-5-19095-R
25,4	12,7	15,9	46	M 10	24587-5-25412-R
Internal thread M 12 x 1					
16	8	11,2	41	M 12 x 1	24588-5-16080-R
19	9,5	12,7	43	M 12 x 1	24588-5-19095-R
25,4	12,7	15,9	46	M 12 x 1	24588-5-25412-R

R15/20 mm please see page 1.33

Technical details
Two TCT cutting edges, cutting on bottom and periphery. Right-hand rotation. For manual feed.

Application
For cutting of solid wood and panel materials.

Core Box Cutters w.rev. TC tip Z1

with circular tip

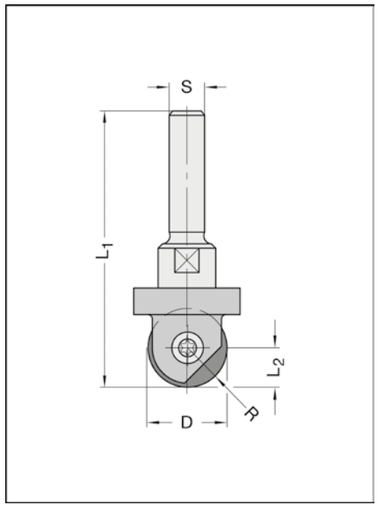

22280 interchangeable shank design

D mm	R mm	L_2 mm	L_1 mm	Shank mm	Part-No.
12,7	6,35	6,35	52	6	22281-5-06300-R
12,7	6,35	6,35	52	6,35	22282-5-06300-R
12,7	6,35	6,35	57	8	22283-5-06300-R
12,7	6,35	6,35	57	12	22286-5-06300-R
19	9,5	9,5	58	6	22281-5-09500-R
19	9,5	9,5	58	6,35	22282-5-09500-R
19	9,5	9,5	63	8	22283-5-09500-R
19	9,5	9,5	63	12	22286-5-09500-R
Internal thread M 10					
12,7	6,35	6,35	47	M 10	22287-5-06300-R
19	9,5	9,5	53	M 10	22287-5-09500-R
Internal thread M 12 x 1					
12,7	6,35	6,35	47	M 12 x 1	22288-5-06300-R
19	9,5	9,5	53	M 12 x 1	22288-5-09500-R

Technical details
Tool body with one replaceable circular TC tip. For manual and mechanical feed. Right-hand rotation.

Four-times the tool life: Just by unscrewing the clamping screw and turning the circular tip you can easily change to a new ready-for-operation section once a part of the tip has become blunt or damaged.

Application
For most core box and cove operations. For use on portable routers or CNC-machines.

Spare parts / Accessories		Part-No.
Circular tip TC	R= 6,35 mm	72680-6-06300-0
Circular tip TC	R= 8 mm	72680-6-08000-0
Circular tip TC	R = 9,5 mm	72680-6-09500-0
Torx clamping screw	M 3,5 x 6,5, T15	39082-0-03565-R
Torx key	T15, with flag	39077-0-04015-1

Water Channel Cutters TCT Z2

Corian / Varicor

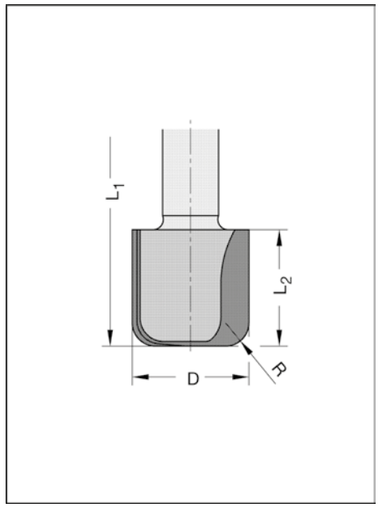

24796-06

D mm	R mm	L_2 mm	L_1 mm	Shank mm	Part-No.
16	5	25	65	12 x 40	24796-5-16006-R
25	5	25	65	12 x 40	24796-5-25006-R

Technical details
Two TCT cutting edges and TCT plunge tip. Right-hand rotation. For manual feed.

Application
Especially for machining Corian- and Varicor boards.
For cutting coves, water channels and drain board profiles on portable routers and CNC machines.
Also applicable for jointing and face milling.

Core Box Cutter TCT Z2

one-piece design

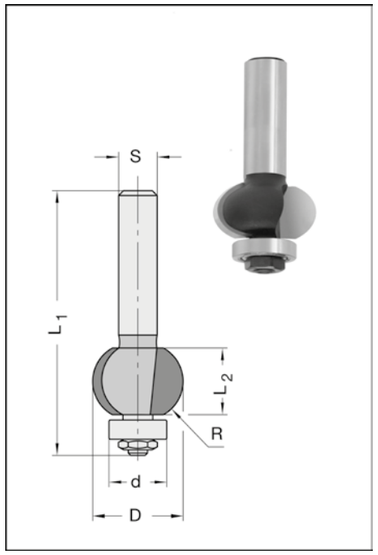

24810

D mm	R mm	L_2 mm	d mm	L_1 mm	Shank mm	Part-No.
19	8	13,2	12	55	8 x 30	24810-5-19000-R

Technical details
Two TCT cutting edges. Interchangeable ball bearing. Right-hand rotation. For manual feed.

Application
For cutting core boxes in wood composites and plastics.

Spare parts / Accessories		Part-No.
Ball bearing	12 mm ø, d= 4,0 mm	39050-0-12000-0
Hexagon nut	M 4, ISO 4032	39150-0-04000-R

Cove Cutters TCT Z2

interchangeable shank design

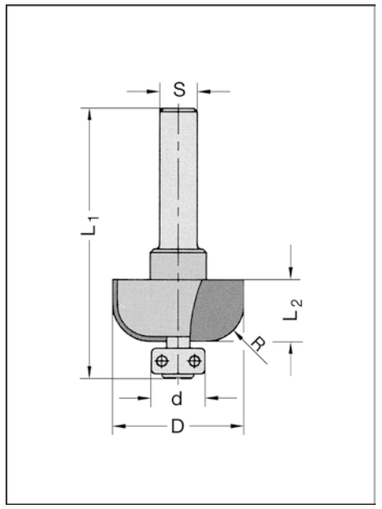

24570-5 with interchangeable ball-bearing guide set

D mm	R mm	L_2 mm	d mm	L_1 mm	Shank mm	Part-No.
22	5	12	12	55	6	24571-5-22050-R
22	5	12	12	55	6,35	24572-5-22050-R
22	5	12	12	60	8	24573-5-22050-R
24,6	6,35	12	12	55	6	24571-5-24663-R
24,6	6,35	12	12	55	6,35	24572-5-24663-R
24,6	6,35	12	12	60	8	24573-5-24663-R
28	8	13	12	56	6	24571-5-28080-R
28	8	13	12	56	6,35	24572-5-28080-R
28	8	13	12	57	8	24573-5-28080-R
31	9,5	14	12	57	6	24571-5-31095-R
31	9,5	14	12	57	6,35	24572-5-31095-R
31	9,5	14	12	62	8	24573-5-31095-R
37,4	12,7	16	12	59	6	24571-5-37127-R
37,4	12,7	16	12	59	6,35	24572-5-37127-R
37,4	12,7	16	12	64	8	24573-5-37127-R

Further shank dimensions see page 1.53.

Technical details
Two straight TCT cutting edges, cutting on periphery, with interchangeable ball bearing guide set.
Right-hand rotation. For manual feed.

Application
For cutting of solid wood and panel materials.

Spare parts / Accessories		Part-No.
Guide set	12 mm ø, complete	39064-0-09012-R

Ovolo Cutters TCT Z2

interchangeable shank design

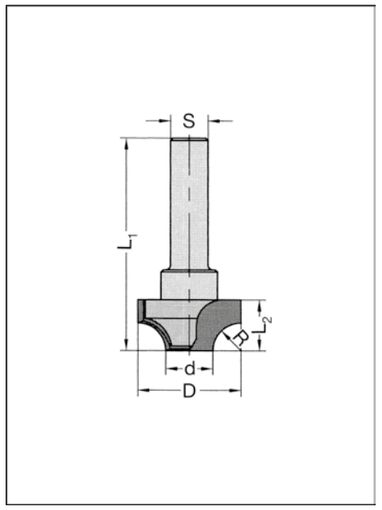

24630-5 with plunge tip

D mm	R mm	L_2 mm	d mm	L_1 mm	Shank mm	Part-No.
19	5	10	9	45	6	24631-5-19050-R
19	5	10	9	50	8	24633-5-19050-R
22	6	11	10	46	6	24631-5-22060-R
22	6	11	10	51	8	24633-5-22060-R
27	8	14	11	49	6	24631-5-27080-R
27	8	14	11	53	8	24633-5-27080-R
30	9,5	15,5	11	51	6	24631-5-30095-R
30	9,5	15,5	11	55	8	24633-5-30095-R
37,4	12,7	18,7	12	58	8	24633-5-00127-R

Further shank dimensions on page 1.53.

Technical details
Two TCT cutting edges, cutting on bottom and periphery. Right-hand rotation. For manual feed.

Application
For cutting of solid wood and panel materials.

Ovolo Cutters TCT Z2

interchangeable shank design

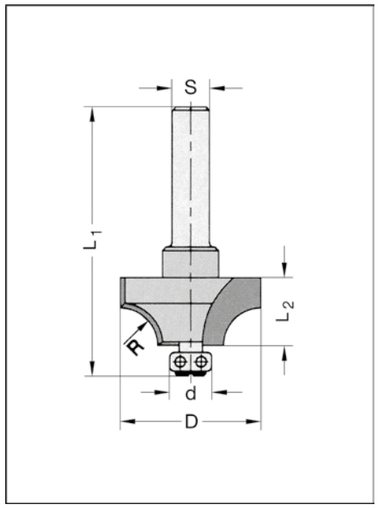

Technical details
Two TCT cutting edges, cutting on bottom and periphery, with interchangeable ball bearing guide set.
Right-hand rotation. For manual feed.
If required, the ball bearing guide set can be removed and replaced by a covering screw No. 39052 or by a ball bearing guide set 12 resp. 14 mm ø (special accessory).

Application
For cutting of solid wood and panel materials.

Examples of application:

Ovolo
(ball bearing guide set 9 mm)

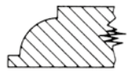

Profiling (without ball bearing guide set)

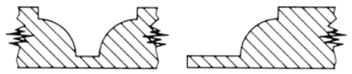

Rounding over
(ball bearing guide sets 12 and 14 mm = special accessories)

24600-5 with interchangeable ball bearing guide set

D mm	R mm	L_2 mm	d mm	L_1 mm	Shank mm	Part-No.
18	3	8	9	51	6	24601-5-18030-R
18	3	8	9	51	6,35	24602-5-18030-R
18	3	8	9	56	8	24603-5-18030-R
18	3	8	9	56	10	24605-5-18030-R
18	3	8	9	56	12	24606-5-18030-R
20	4	9	9	52	6	24601-5-20040-R
20	4	9	9	52	6,35	24602-5-20040-R
20	4	9	9	57	8	24603-5-20040-R
20	4	9	9	57	10	24605-5-20040-R
20	4	9	9	57	12	24606-5-20040-R
22	5	10	9	53	6	24601-5-22050-R
22	5	10	9	53	6,35	24602-5-22050-R
22	5	10	9	58	8	24603-5-22050-R
22	5	10	9	58	10	24605-5-22050-R
22	5	10	9	58	12	24606-5-22050-R
24,6	6,35	11,3	9	54	6	24601-5-24663-R
24,6	6,35	11,3	9	54	6,35	24602-5-24663-R
24,6	6,35	11,3	9	59	8	24603-5-24663-R
24,6	6,35	11,3	9	59	10	24605-5-24663-R
24,6	6,35	11,3	9	59	12	24606-5-24663-R
30	8	14	9	57	6	24601-5-30080-R
30	8	14	9	57	6,35	24602-5-30080-R
30	8	14	9	62	8	24603-5-30080-R
30	8	14	9	62	10	24605-5-30080-R
30	8	14	9	62	12	24606-5-30080-R
33	9,5	15,5	9	59	6	24601-5-33095-R
33	9,5	15,5	9	59	6,35	24602-5-33095-R
33	9,5	15,5	9	64	8	24603-5-33095-R
33	9,5	15,5	9	64	10	24605-5-33095-R
33	9,5	15,5	9	64	12	24606-5-33095-R
39,4	12,7	18,7	9	62	6	24601-5-39127-R
39,4	12,7	18,7	9	62	6,35	24602-5-39127-R
39,4	12,7	18,7	9	67	8	24603-5-39127-R
39,4	12,7	18,7	9	67	10	24605-5-39127-R
39,4	12,7	18,7	9	67	12	24606-5-39127-R
44	15	21	9	72	6,35	24602-5-44150-R
44	15	21	9	72	8	24603-5-44150-R
44	15	21	9	72	10	24605-5-44150-R
44	15	21	9	62	12	24606-5-44150-R
Internal thread M 10						
18	3	8	9	46	M 10	24607-5-18030-R
20	4	9	9	47	M 10	24607-5-20040-R
22	5	10	9	48	M 10	24607-5-22050-R
24,6	6,35	11,3	9	49	M 10	24607-5-24663-R
30	8	14	9	52	M 10	24607-5-30080-R
33	9,5	15,5	9	53	M 10	24607-5-33095-R
39,4	12,7	18,7	9	56	M 10	24607-5-39127-R
44	15	21	9	62	M 10	24607-5-44150-R

All dimensions also available with shank M 12 x 1.

Spare parts / Accessories		Part-No.
Guide set	9 mm ø, complete	39064-0-09000-R
Guide set	12 mm ø, complete (special accessory)	39064-0-09012-R
Guide set	14 mm ø (special accessory)	39064-0-09014-R
Covering screw	M 3,5 x 6,0 mm (special accessory)	39052-0-03500-R

Ovolo Cutters TCT Z2

interchangeable shank design

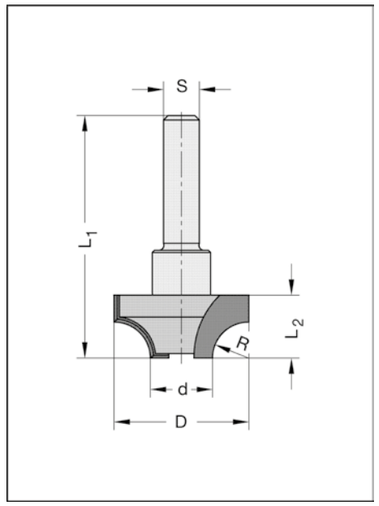

24610-5

D mm	R mm	L_2 mm	d mm	L_1 mm	Shank mm	Part-No.
18	3	8	12	43	6	24611-5-18030-R
18	3	8	12	43	6,35	24612-5-18030-R
18	3	8	12	48	8	24613-5-18030-R
18	3	8	12	48	10	24615-5-18030-R
18	3	8	12	48	12	24616-5-18030-R
20	4	9	12	44	6	24611-5-20040-R
20	4	9	12	44	6,35	24612-5-20040-R
20	4	9	12	49	8	24613-5-20040-R
20	4	9	12	49	10	24615-5-20040-R
20	4	9	12	49	12	24616-5-20040-R
22	5	10	12	45	6	24611-5-22050-R
22	5	10	12	45	6,35	24612-5-22050-R
22	5	10	12	50	8	24613-5-22050-R
22	5	10	12	50	10	24615-5-22050-R
22	5	10	12	50	12	24616-5-22050-R
24,6	6,35	11,3	12	46	6	24611-5-24663-R
24,6	6,35	11,3	12	46	6,35	24612-5-24663-R
24,6	6,35	11,3	12	51	8	24613-5-24663-R
24,6	6,35	11,3	12	51	10	24615-5-24663-R
24,6	6,35	11,3	12	51	12	24616-5-24663-R
30	8	14	14	49	6	24611-5-30080-R
30	8	14	14	49	6,35	24612-5-30080-R
30	8	14	14	54	8	24613-5-30080-R
30	8	14	14	54	10	24615-5-30080-R
30	8	14	14	54	12	24616-5-30080-R
33	9,5	15,5	14	51	6	24611-5-33095-R
33	9,5	15,5	14	51	6,35	24612-5-33095-R
33	9,5	15,5	14	56	8	24613-5-33095-R
33	9,5	15,5	14	56	10	24615-5-33095-R
33	9,5	15,5	14	56	12	24616-5-33095-R
39,4	12,7	18,7	14	54	6	24611-5-39127-R
39,4	12,7	18,7	14	54	6,35	24612-5-39127-R
39,4	12,7	18,7	14	59	8	24613-5-39127-R
39,4	12,7	18,7	14	59	10	24615-5-39127-R
39,4	12,7	18,7	14	59	12	24616-5-39127-R
Internal thread M 10						
18	3	8	12	38	M 10	24617-5-18030-R
20	4	9	12	39	M 10	24617-5-20040-R
22	5	10	12	40	M 10	24617-5-22050-R
24,6	6,35	11,3	12	41	M 10	24617-5-24663-R
30	8	14	14	44	M 10	24617-5-30080-R
33	9,5	15,5	14	46	M 10	24617-5-33095-R
39,4	12,7	18,7	14	49	M 10	24617-5-39127-R
Internal thread M 12 x 1						
18	3	8	12	38	M 12 x 1	24618-5-18030-R
20	4	9	12	39	M 12 x 1	24618-5-20040-R
22	5	10	12	40	M 12 x 1	24618-5-22050-R
24,6	6,35	11,3	12	41	M 12 x 1	24618-5-24663-R
30	8	14	14	44	M 12 x 1	24618-5-30080-R
33	9,5	15,5	14	46	M 12 x 1	24618-5-33095-R
39,4	12,7	18,7	14	49	M 12 x 1	24618-5-39127-R

Technical details

Two TCT cutting edges, cutting on bottom and periphery. Right-hand rotation. For manual feed. If required the bottom covering screw can be removed and replaced by a ball bearing guide set ø = 9, 12 or 14 mm (special accessories).

Application

For cutting of solid wood and panel materials.

Examples of application:

Rounding over

Profiling

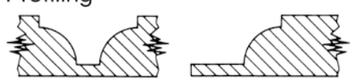

Ovolo

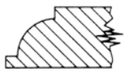

Spare parts / Accessories		Part-No.
Guide set	9 mm ø, complete	39064-0-09000-R
Guide set	12 mm ø, complete	39064-0-09012-R
Guide set	14 mm ø, complete	39064-0-09014-R
Covering screw	M 3,5 x 6,0 mm	39052-0-03500-R

Rounding Over Cutters TCT Z2

interchangeable shank design

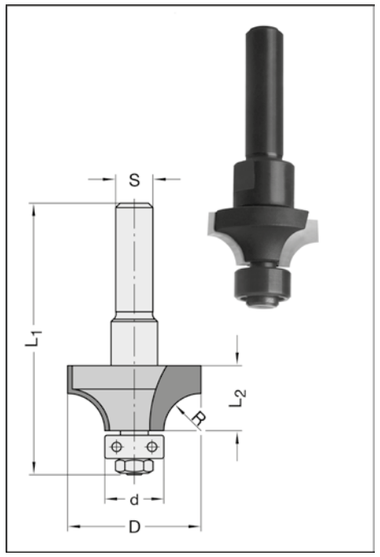

24620-5 with interchangeable ball bearing guide set

D mm	R mm	L_2 mm	d mm	L_1 mm	Shank mm	Part-No.
16	2	7	12	50	6	24621-5-16020-R
16	2	7	12	50	6,35	24622-5-16020-R
16	2	7	12	55	8	24623-5-16020-R
18	3	8	12	51	6	24621-5-18030-R
18	3	8	12	51	6,35	24622-5-18030-R
18	3	8	12	56	8	24623-5-18030-R
18	3	8	12	56	10	24625-5-18030-R
18	3	8	12	56	12	24626-5-18030-R
20	4	9	12	52	6	24621-5-20040-R
20	4	9	12	52	6,35	24622-5-20040-R
20	4	9	12	57	8	24623-5-20040-R
20	4	9	12	57	10	24625-5-20040-R
20	4	9	12	57	12	24626-5-20040-R
22	5	10	12	53	6	24621-5-22050-R
22	5	10	12	53	6,35	24622-5-22050-R
22	5	10	12	58	8	24623-5-22050-R
22	5	10	12	58	10	24625-5-22050-R
22	5	10	12	58	12	24626-5-22050-R
24,6	6,35	11,3	12	54	6	24621-5-24663-R
24,6	6,35	11,3	12	54	6,35	24622-5-24663-R
24,6	6,35	11,3	12	59	8	24623-5-24663-R
24,6	6,35	11,3	12	59	10	24625-5-24663-R
24,6	6,35	11,3	12	59	12	24626-5-24663-R
30	8	14	14	57	6	24621-5-30080-R
30	8	14	14	57	6,35	24622-5-30080-R
30	8	14	14	62	8	24623-5-30080-R
30	8	14	14	62	10	24625-5-30080-R
30	8	14	14	62	12	24626-5-30080-R
33	9,5	15,5	14	59	6	24621-5-33095-R
33	9,5	15,5	14	59	6,35	24622-5-33095-R
33	9,5	15,5	14	64	8	24623-5-33095-R
33	9,5	15,5	14	64	10	24625-5-33095-R
33	9,5	15,5	14	64	12	24626-5-33095-R
39,4	12,7	18,7	14	62	6	24621-5-39127-R
39,4	12,7	18,7	14	62	6,35	24622-5-39127-R
39,4	12,7	18,7	14	67	8	24623-5-39127-R
39,4	12,7	18,7	14	67	10	24625-5-39127-R
39,4	12,7	18,7	14	67	12	24626-5-39127-R
44	15	21	14	72	8	24623-5-44150-R
44	15	21	14	72	10	24625-5-44150-R
44	15	21	14	72	12	24626-5-44150-R
Internal thread						
18	3	8	12	46	M 10	24627-5-18030-R
20	4	9	12	47	M 10	24627-5-20040-R
22	5	10	12	48	M 10	24627-5-22050-R
24,6	6,35	11,3	12	49	M 10	24627-5-24663-R
30	8	14	14	52	M 10	24627-5-30080-R
33	9,5	15,5	14	53	M 10	24627-5-33095-R
39,4	12,7	18,7	14	56	M 10	24627-5-39127-R
44	15	21	14	62	M 10	24627-5-44150-R
18	3	8	12	46	M 12 x 1	24628-5-18030-R
20	4	9	12	47	M 12 x 1	24628-5-20040-R
22	5	10	12	48	M 12 x 1	24628-5-22050-R
24,6	6,35	11,3	12	49	M 12 x 1	24628-5-24663-R
30	8	14	14	52	M 12 x 1	24628-5-30080-R
33	9,5	15,5	14	53	M 12 x 1	24628-5-33095-R
39,4	12,7	18,7	14	56	M 12 x 1	24628-5-39127-R
44	15	21	14	62	M 12 x 1	24628-5-44150-R

Technical details

Two TCT cutting edges, cutting on bottom and periphery, with interchangeable ball bearing guide set. Right-hand rotation. For manual feed. If required, the ball bearing guide set can be removed and replaced by a covering screw No. 39052 or by a ball bearing guide set 9 mm Ø (special accessory). Guide sets 12 and 14 mm Ø also available with synthetic coating.

Application

For cutting of solid wood and panel materials.

PCD rounding over cutter type 11000 see page 1.54.

Examples of application:

Rounding over
(ball bearing guide set 12 and 14 mm)

Profiling (without ball bearing guide set)

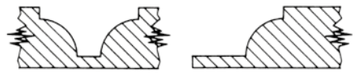

Ovolo
(ball bearing guide set 9 mm = special accessory)

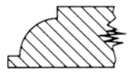

Spare parts / Accessories		Part-No.
Guide set	12 mm ø, complete	39064-0-09012-R
Guide set	14 mm ø, complete	39064-0-09014-R
Guide set	12 mm ø, complete with synthetic quide ring	39064-0-09012-K
Guide set	14 mm ø, complete with synthetic quide ring	39064-0-09014-K
Guide set	9 mm ø, complete (special accessory)	39064-0-09000-R
Covering screw	M 3,5 x 6,0 mm (special accessory)	39052-0-03500-R

Ovolo Cutters TCT Z2

one-piece design

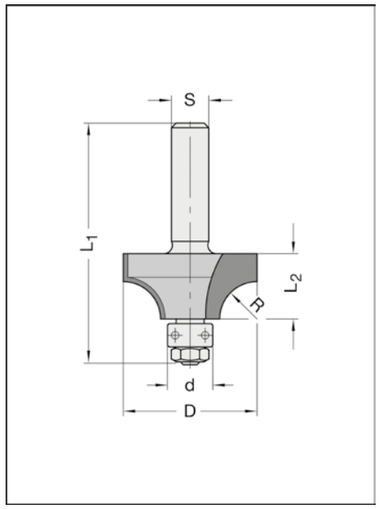

24370-5 with ball bearing guide

D mm	R mm	L_2 mm	d mm	L_1 mm	Shank mm	Part-No.
25,4	6,35	11,3	9,5	49	8	24373-5-25463-R
28,7	8	14	9,5	52	8	24373-5-28780-R
31,7	9,5	15,5	9,5	53	8	24373-5-31795-R
38,1	12,7	18,7	9,5	56	8	24373-5-38127-R

Technical details
Two TCT cutting edges, cutting on bottom and periphery. Interchangeable ball bearing. Right-hand rotation. For manual feed.

Application
For cutting of solid wood and panel materials.

Spare parts / Accessories		Part-No.
Ball bearing	9,5 mm ø, d= 4,76 mm	39050-0-09500-0
Hexagon nut	M 4	39150-0-04000-R

Rounding Over Cutters TCT Z2

one-piece design

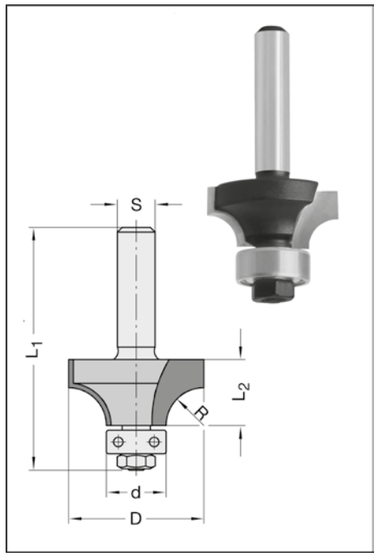

24380-5 with ball bearing guide

D mm	R mm	L_2 mm	d mm	L_1 mm	Shank mm	Part-No.
18,7	3	8	12,7	46	6	24381-5-18730-R
18,7	3	8	12,7	46	8	24383-5-18730-R
20,7	4	9	12,7	47	6	24381-5-20740-R
20,7	4	9	12,7	47	8	24383-5-20740-R
22,7	5	10	12,7	48	6	24381-5-22750-R
22,7	5	10	12,7	48	6,35	24382-5-22750-R
22,7	5	10	12,7	48	8	24383-5-22750-R
25,4	6,35	11,3	12,7	49	6,35	24382-5-25463-R
25,4	6,35	11,3	12,7	49	8	24383-5-25463-R
28,7	8	14	12,7	52	6,35	24382-5-28780-R
28,7	8	14	12,7	52	8	24383-5-28780-R
31,7	9,5	15,5	12,7	53	8	24383-5-31795-R
38,1	12,7	18,7	12,7	56	8	24383-5-38127-R
53	20	27	12	65	12	24386-5-53200-R
63	25	32	12	70	12	24386-5-63250-R

PCD rounding over cutter type 11000 see page 1.54.

Technical details
Two TCT cutting edges, cutting on periphery only. Interchangeable ball bearing, ball bearing guide set for R = 20 and 25 mm. Right-hand rotation. For manual feed.

Application
For cutting of solid wood and panel materials.

Spare parts / Accessories		Part-No.
Guide set	12 mm ø, complete (only for R = 20/25 mm)	39064-0-09012-R
Ball bearing	12,7 mm ø, d= 4,76 mm	39050-0-12700-0
Ball bearing	15,9 mm ø, d= 6,35 mm	39050-0-15900-K
Hexagon nut	M 4, for ø 12,7/15,9 mm	39150-0-04000-R

Rounding Over Cutters TCT Z2

for portable edge rounding machines

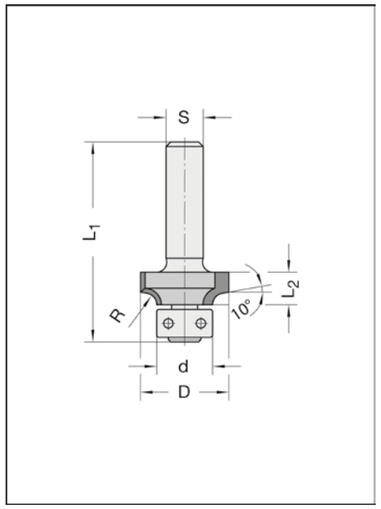

24360-5 with synthetic guide ring

D mm	R mm	L_2 mm	d mm	L_1 mm	Shank mm	Part-No.
18	2	7,5	12	43	6	24361-5-00020-R
18	2	7,5	12	43	8	24363-5-00020-R
19	2,5	8	12	43	8	24363-5-00025-R
20	3	8,5	12	44	6	24361-5-00030-R
20	3	8,5	12	44	8	24363-5-00030-R

Technical details
Two TCT cutting edges. Radius with flair 10°. Interchangeable ball bearing with synthetic guide ring. Right-hand rotation. For manual feed.

Application
To be used on edge rounding machines with guide disc, as well as on regular portable routers.

Spare parts / Accessories		Part-No.
Ball bearing	12 mm ø, d= 4,0 mm	39061-0-09012-K
Torx countersunk screw	M 2,5 x 5,5, T 7	39084-0-02555-R
Torx key	T 7, with flag	39077-0-02507-1

Rounding Over Cutters w. rev. TC tips Z2

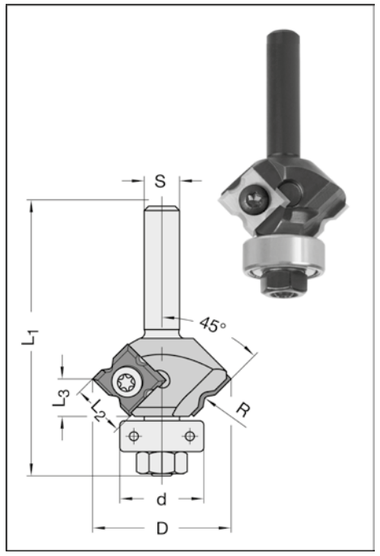

22240-5 Multi - with interchangeable ball bearing guide

D mm	L_2 mm	d mm	Radii mm	L_3 mm	L_1 mm	Shank mm	Part-No.
31,4	12	19,05	1 / 2 / 3	8,5	61	8	22243-5-31012-R
31,4	12	19,05	1 / 2 / 3	8,5	61	10	22245-5-31012-R
31,4	12	19,05	1 / 2 / 3	8,5	61	12	22246-5-31012-R

Technical details
Sturdy steel-cutter body with two 4-sided reversible TC tips R1/R2/R3/45°. With interchangeable ball bearing guide. Right-hand rotation. For manual feed.

Application
For edge rounding and bevelling on solid wood, various kinds of panel materials and plastic.

- One tool body for six different TC rounding tips
- High flexibility through tips with different radii

Spare parts / Accessories		Part-No.
Reversible TC tip	12 x 12 x 1,5 mm. R 1 / 2 / 3 mm, HW02	72240-6-12123-R
Reversible TC tip	12 x 12 x 1,5 mm. R 1 mm, HW02	72240-6-12010-R
Reversible TC tip	12 x 12 x 1,5 mm. R 1,5 mm, HW02	72240-6-12015-R
Reversible TC tip	12 x 12 x 1,5 mm. R 2 mm, HW02	72240-6-12020-R
Reversible TC tip	12 x 12 x 1,5 mm. R 2,5 mm, HW02	72240-6-12025-R
Reversible TC tip	12 x 12 x 1,5 mm. R 3 mm, HW02	72240-6-12030-R
Torx clamping screw	M 4 x 5, large head, T15	39081-0-04050-R
Hexagon nut	M 6, ISO 4032	39150-0-06000-R
Ball bearing	19 mm ø, d= 6,35 mm	39050-0-19000-0
Torx key	T15, with handle	39077-0-04015-1

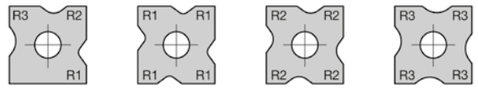

UNITEC Rounding Over / Ovolo Cutters Z2

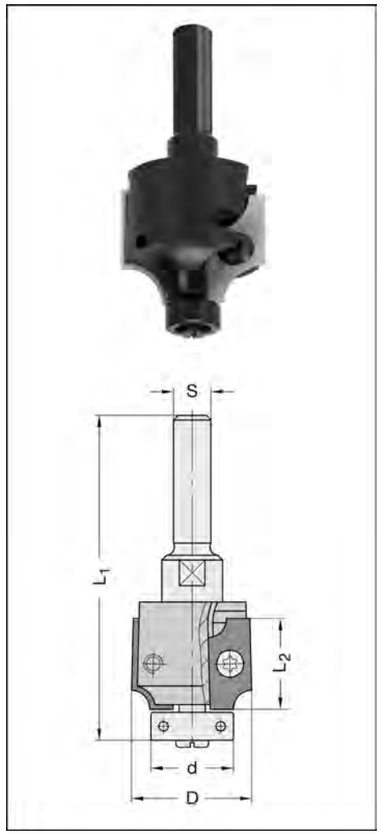

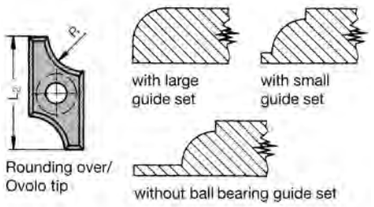

22140 interchangeable shank design

D mm	R mm	L_2 mm	Size No.	d mm	L_1 mm	Shank mm	Part-No.
With 1 resp. 2 ball bearing guide sets							
26	2	19,5	1	22	65	6	22141-5-26002-R
26	2	19,5	1	22	65	6,35	22142-5-26002-R
26	2	19,5	1	22	70	8	22143-5-26002-R
26	3	19,5	1	20/18	65	6	22141-5-26003-R
26	3	19,5	1	20/18	65	6,35	22142-5-26003-R
26	3	19,5	1	20/18	70	8	22143-5-26003-R
26	4	19,5	1	18/14	65	6	22141-5-26004-R
26	4	19,5	1	18/14	65	6,35	22142-5-26004-R
26	4	19,5	1	18/14	70	8	22143-5-26004-R
26	5	19,5	1	16/12	65	6	22141-5-26005-R
26	5	19,5	1	16/12	65	6,35	22142-5-26005-R
26	5	19,5	1	16/12	70	8	22143-5-26005-R
32	6	26	2	20/16	72	6	22141-5-32006-R
32	6	26	2	20/16	72	6,35	22142-5-32006-R
32	6	26	2	20/16	77	8	22143-5-32006-R
32	8	26	2	16/12	72	6	22141-5-32008-R
32	8	26	2	16/12	72	6,35	22142-5-32008-R
32	8	26	2	16/12	77	8	22143-5-32008-R
36	10	30	3	16/12	82	8	22143-5-36010-R
Without ball bearing guide set							
26	2	19,5	1	-	57	6	22141-5-26102-R
26	2	19,5	1	-	62	8	22143-5-26102-R
26	3	19,5	1	-	57	6	22141-5-26103-R
26	3	19,5	1	-	62	8	22143-5-26103-R
26	4	19,5	1	-	57	6	22141-5-26104-R
26	4	19,5	1	-	62	8	22143-5-26104-R
26	5	19,5	1	-	57	6	22141-5-26105-R
26	5	19,5	1	-	62	8	22143-5-26105-R
26	5	19,5	1	-	62	10	22145-5-26105-R
26	5	19,5	1	-	62	12	22146-5-26105-R
32	6	26	2	-	64	6	22141-5-32106-R
32	6	26	2	-	69	8	22143-5-32106-R
32	6	26	2	-	69	10	22145-5-32106-R
32	6	26	2	-	69	12	22146-5-32106-R
32	8	26	2	-	64	6	22141-5-32108-R
32	8	26	2	-	69	8	22143-5-32108-R
32	8	26	2	-	69	10	22145-5-32108-R
32	8	26	2	-	69	12	22146-5-32108-R
36	10	30	3	-	73	8	22143-5-36110-R
36	10	30	3	-	73	10	22145-5-36110-R
36	10	30	3	-	73	12	22146-5-36110-R

Technical details

Two reversible TC tips, profiled on both sides, cutting on bottom and periphery, with shear angle.
The covering screw on the bottom can be replaced by the adjoined ball bearing sets. The larger one is used for rounding over, the smaller one for ovolo profiles. Right-hand rotation. For manual feed.

Size1:
Rounding over R = 2/3/4/5 mm (= manual feed), bevelling 5 x 45°, coving R = 5 mm and rebating 19,4 mm (= mechanical feed)

Size2:
Rounding over R = 6+8 mm (= manual feed), bevelling 8 x 45°, coving R = 6+8 mm, rebating 26 mm, special profile knives (= mechanical feed)

Size3:
Rounding over R = 10 mm (= manual feed), bevelling 10 x 45°, coving R = 10 mm, rebating 30 mm, standard- and special profile knives (= mechanical feed)

Application

For cutting of solid wood and panel materials.

Continued on next page.

UNITEC Rounding Over / Ovolo Cutters Z2 **continuation**

Tools for Portable Routers

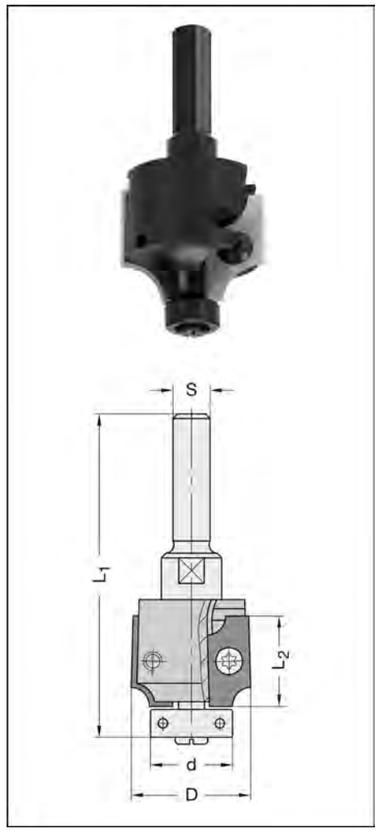

22140 Rounding Over / Ovolo Cutter spare parts

Rounding over tips (No. 72140) for use in manual feed and mechanical feed.
Screws and keys for manual and mechanical feed.
Guide sets only for manual feed.

Coving tips[1] (No. 72145), Rebating tips[1] (No. 72142), Bevelling tips[1] (No. 72148) for use in UNITEC universal cutter No. 22140-0 in MECHANICAL feed.

Special profile knives (No. 72149) for manual feed and mechanical feed possible.
Standard profile knives (No. 72149 profile 1-11) for use in mechanical feed (Unitec No. 22140-0) and / or manual feed (Unitec No. 22150).

For special profile knives (mechanical feed and manual feed)
Quantity discounts, ordering same profile: 5 - 9 pcs. = 12%, up from 10 pcs. = 25 %.
Template costs: see page 7.32

Spare parts / Accessories		Part-No.
Rounding over tip, TC	19,4 x 9 x 1,5 mm, R= 2 mm, size 1	72140-6-00002-0
Rounding over tip, TC	19,4 x 9 x 1,5 mm, R= 3 mm, size 1	72140-6-00003-0
Rounding over tip, TC	19,4 x 9 x 1,5 mm, R= 4 mm, size 1	72140-6-00004-0
Rounding over tip, TC	19,4 x 9 x 1,5 mm, R= 5 mm, size 1	72140-6-00005-0
Rounding over tip, TC	26 x 12,5 x 1,5 mm, R= 6 mm, size 2	72140-6-00006-0
Rounding over tip, TC	26 x 12,5 x 1,5 mm, R= 8 mm, size 2	72140-6-00008-0
Rounding over tip, TC	30 x 14,5 x 1,5 mm, R= 10 mm, size 3	72140-6-00010-0
Coving tip, TC[1)]	19,4 x 9 x 1,5 mm, R= 5 mm, size 1	72145-6-00005-0
Coving tip, TC[1)]	26 x 12,5 x 1,5 mm, R= 6 mm, size 2	72145-6-00006-0
Coving tip, TC[1)]	26 x 12,5 x 1,5 mm, R= 8 mm, size 2	72145-6-00008-0
Coving tip, TC[1)]	30 x 14,5 x 1,5 mm, R= 10 mm, size 3	72145-6-00010-0
Rebating tip, TC[1)]	19,4 x 9 x 1,5 mm, 4-sided, size 1	72142-6-19500-0
Rebating tip, TC[1)]	26 x 12,5 x 1,5 mm, 4-sided, size 2	72142-6-26000-0
Rebating tip, TC[1)]	30 x 14,5 x 1,5 mm, 4-sided, size 3	72142-6-30000-0
Bevelling tip, TC[1)]	19,4 x 9 x 1,5 mm, L_3= 5 mm, size 1	72148-6-19545-0
Bevelling tip, TC[1)]	26 x 12,5 x 1,5 mm, L_3= 8 mm, size 2	72148-6-26045-0
Bevelling tip, TC[1)]	30 x 14,5 x 1,5 mm, L_3= 10 mm, size 3	72148-6-30045-0
Profile tip, TC	30 x 14,5 x 1,5 mm, profile no. 1	72149-6-00001-R
Profile tip, TC	30 x 14,5 x 1,5 mm, profile no. 2	72149-6-00002-R
Profile tip, TC	30 x 14,5 x 1,5 mm, profile no. 3	72149-6-00003-R
Profile tip, TC	30 x 14,5 x 1,5 mm, profile no. 4	72149-6-00005-R
Profile tip, TC	30 x 14,5 x 1,5 mm, profile no. 5	72149-6-00004-R
Profile tip, TC	30 x 14,5 x 1,5 mm, profile no. 11	72149-6-30011-R
Blank, TC	26,5 x 12,5 x 1,5 mm, 2-sided, size 2, unprofiled	72149-6-26000-R
Profile tip, TC	26 x 12,5 x 1,5 mm, special profile, profiled on both sides, size 2	72149-6-26001-R
Blank, TC	30,5 x 14,5 x 1,5 mm, 2-sided, size 3, unprofiled	72149-6-30000-R
Profile tip, TC	30 x 14,5 x 1,5 mm, special profile, profiled on both sides, size 3	72149-6-30001-R
Guide set	12 mm ø, complete	39064-0-09012-R
Guide set	14 mm ø, complete	39064-0-09014-R
Guide set	16 mm ø, complete	39064-0-09016-R
Guide set	18 mm ø, complete	39064-0-09018-R
Guide set	20 mm ø, complete	39064-0-09020-R
Guide set	22 mm ø, complete	39064-0-09022-R
Torx clamping screw	M 4 x 6, T15, for D= 26 mm	39081-0-04060-R
Torx clamping screw	M 4 x 5,9, extra-large head, T15	39076-0-04000-R
Covering screw	M 3,5	39052-0-03500-R
Torx key	T15, with flag	39077-0-04015-1

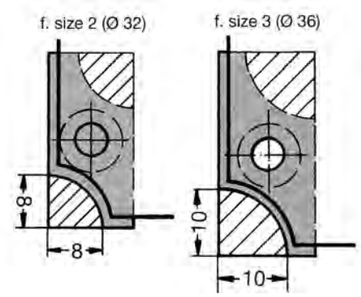

Area available for profiling (1:1)

Please specify profile and add sketch and/or wood sample when ordering.

Profile Cutters for Arched Windows TCT Z2

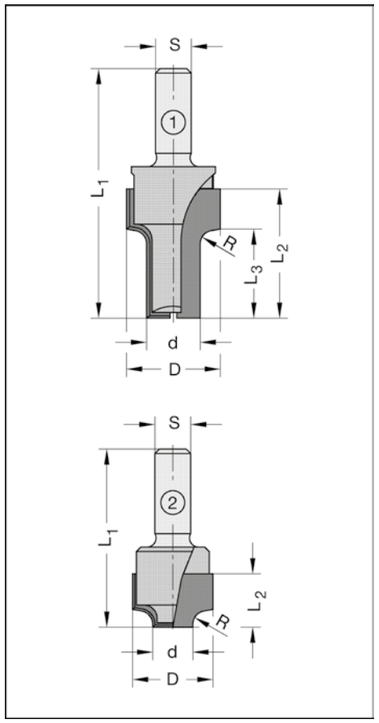

24123 / 24133

Cutter No.	D mm	R mm	d mm	L_2 mm	L_3 mm	Shank mm	Part-No.
1	21	3	12	29	23	8	24133-5-00030-R
2	18	3	9	12	-	8	24123-5-00030-R

Technical details
Cutter No.1 + 2 with two TCT cutting edges, cutting on bottom and periphery, height adjusted.
Right-hand rotation. For manual feed.

Application
Cutter No. 1 for jointing and edge rounding of sash and frame.
Cutter No. 2 for cutting shadow groove with simultaneous edge rounding.

For use on portable routers with arched window jigs.

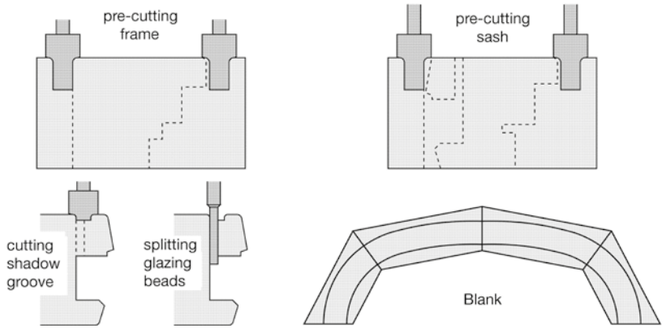

Double Radius Cutter TCT Z4+4

Corian / Varicor

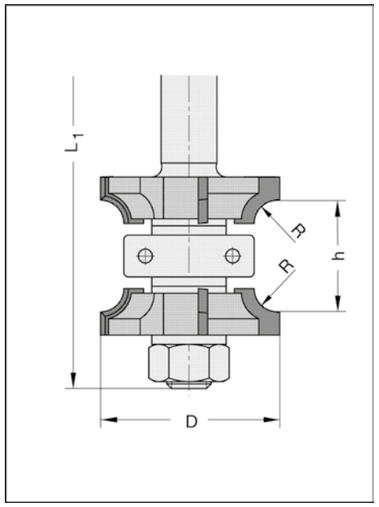

24796-10

D mm	R mm	h mm	L_1 mm	Shank mm	Part-No.
38	5	20-42	93	12 x 40	24796-5-00010-R

Technical details
Four TCT cutting edges. Cutting on periphery. Right-hand rotation. For manual feed.

Application
Especially for machining Corian- and Varicor boards.
To produce double radius in one pass, adjustable should material thicknesses vary.

Spare parts / Accessories		Part-No.
Ball bearing	25 mm ø, d= 9,5 mm, synthetic coated	39050-0-25095-K
Ball bearing	28 mm ø, d= 9,5 mm, synthetic coated	39050-0-28095-K

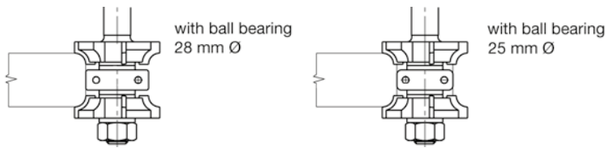

Overlay Timming Cutter TCT Z2

Corian / Varicor

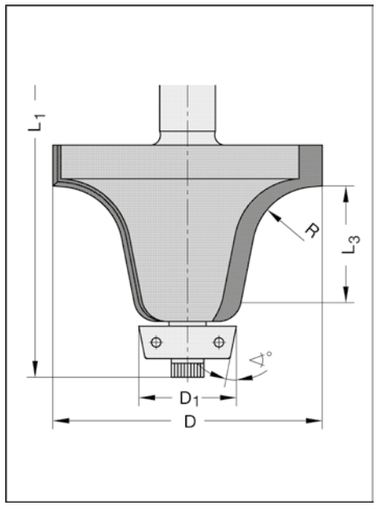

24796-12

D mm	D_1 mm	R mm	Angle	L_3 mm	L_1 mm	Shank mm	Part-No.
56	22	12,7	11°	26	90	12 x 40	24796-5-12712-R

Technical details
Two TCT cutting edges, only cutting on periphery. With synthetic coated ball bearing. Right-hand rotation.
For manual feed.

Application
Especially for machining Corian- and Varicor boards.
For rounding of counter tops of the bowl.

Spare parts / Accessories		Part-No.
Ball bearing	22 mm ø, d= 6,35 mm, 11°, synthetic coated	39050-0-22011-K

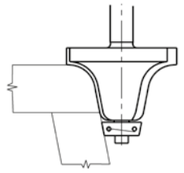

Overlay Trimming Cutter TCT Z2

Corian / Varicor

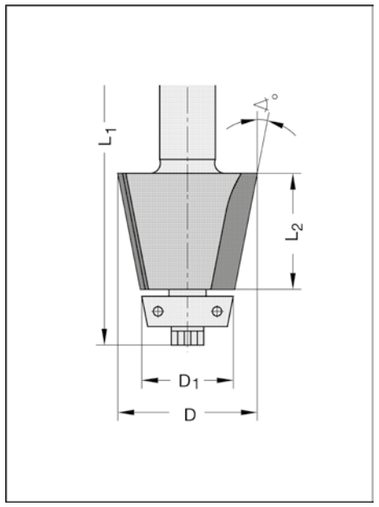

24796-04

D mm	D_1 mm	L_2 mm	Angle	L_1 mm	Shank mm	Part-No.
32	22	25	11°	96	12 x 40	24796-5-00004-R

Technical details
Two TCT cutting edges, only cutting on periphery. With synthetic coated ball bearing. Right-hand rotation.
For manual feed.

Application
Especially for machining Corian- and Varicor boards.
For edging sinks and vanity bowls. The special taper on the Bearing sleeve allows for perfect guide following around the inside of the bowl.

Spare parts / Accessories		Part-No.
Ball bearing	22 mm ø, d= 6,35 mm, 11°, synthetic coated	39050-0-22011-K

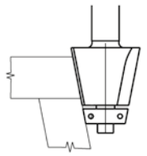

Profile Cutter TCT Z2

Corian / Varicor

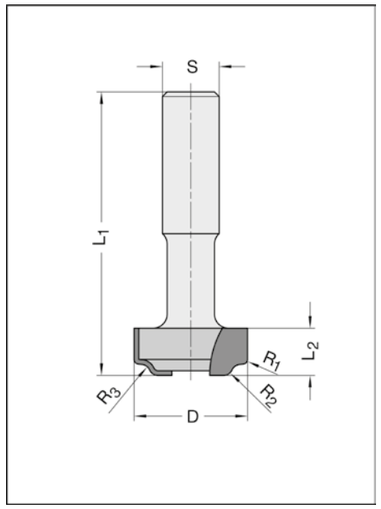

24796-03

D mm	R1/R2/R3 mm	L_2 mm	L_1 mm	Shank mm	Part-No.
24	1 / 2 / 2	10	60	12 x 30	24796-5-00003-R

Technical details
Two TCT cutting edges, cutting on bottom and periphery. Right-hand rotation. For manual feed.

Application
Especially for machining Corian- and Varicor boards.
For creating a 'step down' shadow line between bowl and sheet, as well as for edge rounding.

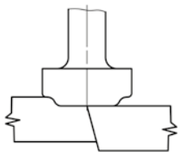

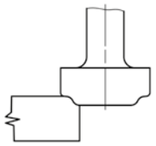

Profile Cutter TCT Z2

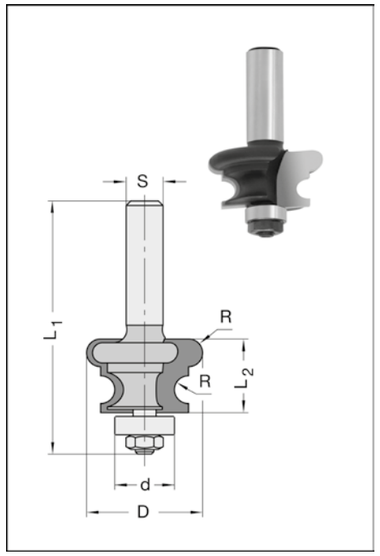

24714

D mm	R mm	d mm	L_2 mm	L_1 mm	Shank mm	Part-No.
25,4	3/3	9	16	55	8 x 27	24714-5-25402-R

Technical details
Two TCT cutting edges. Interchangeable ball bearing. Right-hand rotation. For manual feed.

Application
For profiling of various kinds of wood composites and plastics. Especially for profiling of bars for furniture roller shutters.

Spare parts / Accessories		Part-No.
Ball bearing	9 mm ø, d= 4,0 mm	39050-0-09000-0
Hexagon nut	M 4, ISO 4032	39150-0-04000-R

Ball Grooving Cutters TCT Z2

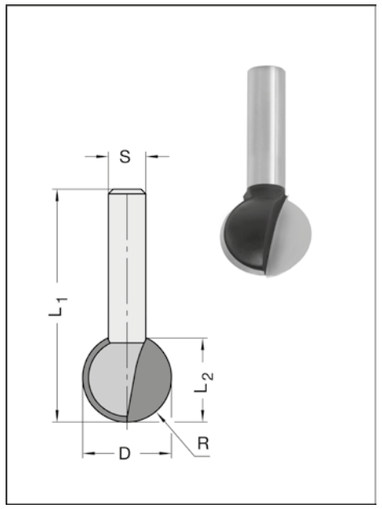

24770

D mm	R mm	L_2 mm	L_1 mm	Shank mm	Part-No.
12,7	6,35	11	45	8 x 30	24770-5-12702-R
16	8	14,3	45	8 x 30	24770-5-16002-R
19	9,5	18	50	8 x 30	24770-5-19002-R
25,4	12,7	24,1	55	8 x 30	24770-5-25402-R

Technical details
Two TCT cutting edges, cutting on bottom and periphery. Right-hand rotation. For manual feed.

Application
For core box and coves operations or grooves, e.g. for cable channels in wood composites and plastics.
Using the complete cutting width, a straight groove has to cut at first to relieve the ball grooving router cutter.

Finger Pull Cutters TCT Z2

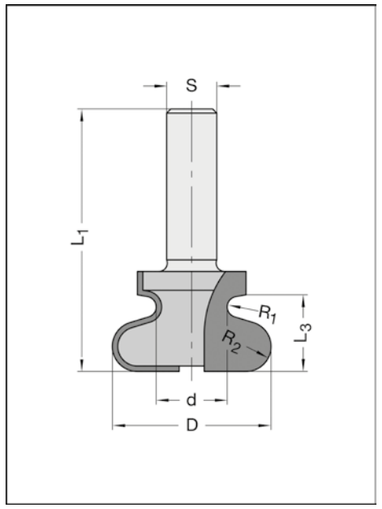

24780-5 / 24330

D mm	R_1/R_2 mm	L_3 mm	d mm	L_1 mm	Shank mm	Part-No.
Interchangeable shank design						
19	2,5/5	14,5	10	55	6,35	24782-5-19000-R
19	2,5/5	14,5	10	60	8	24783-5-19000-R
19	2,5/5	14,5	10	60	10	24785-5-19000-R
19	2,5/5	14,5	10	60	12	24786-5-19000-R
One-piece design						
38	2,5/6	18	17	52	8	24333-5-38000-R
38	2,5/6	18	17	63	12	24336-5-38000-R

Technical details
Two straight TCT cutting edges, cutting on bottom and periphery. Right-hand rotation. For manual feed.

Application
For cutting finger pulls and handles.

Examples of profiles

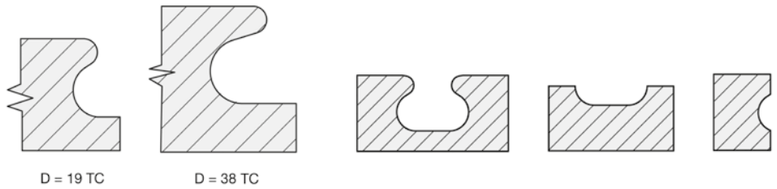

Roman Ogee Cutter TCT Z2

interchangeable shank design

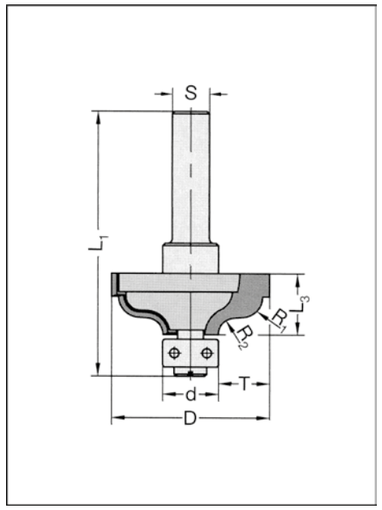

24470 with interchangeable ball bearing guide set

D mm	T mm	L_3 mm	R_1/R_2 mm	d mm	L_1 mm	Shank mm	Part-No.
34	11	8,2	4,5/3,6	12	53	8	24473-5-34000-R

Further shank dimensions see page 1.53.

Technical details
Two TCT cutting edges, cutting on bottom and periphery, with interchangeable guide set. Right-hand rotation.
For manual feed.

Application
For cutting of solid wood and panel materials.

Spare parts / Accessories		Part-No.
Guide set	9 mm ø, complete (special accessory)	39064-0-09000-R
Guide set	12 mm ø, complete	39064-0-09012-R

Examples of profiles

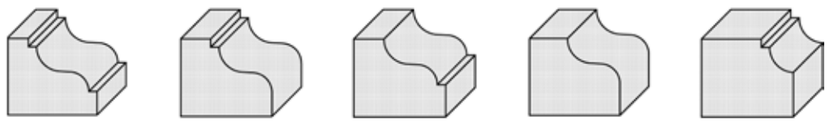

UNITEC Profile Cutters TC Z2

interchangeable shank design

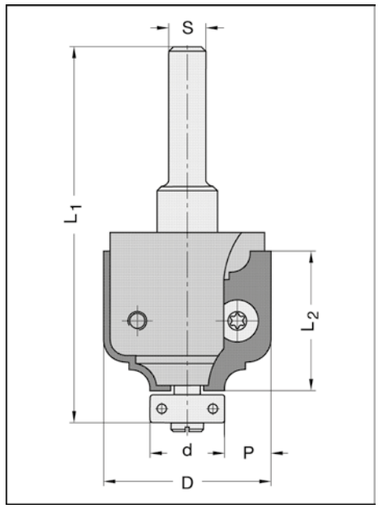

Profile knives no. 1 - 11 also for use in the UNITEC-Universal router cutter No. 22140 in MECHANICAL feed.

22150 with interchangeable ball bearing guide set

D mm	L_2 mm	P mm	Profile No.	d mm	L_1 mm	Shank mm	Part-No.
36	30	10	1	16	82	8	22153-5-00001-R
36	30	10	1	16	82	12	22156-5-00001-R
36	30	10	2	12	82	8	22153-5-00002-R
36	30	10	2	12	82	12	22156-5-00002-R
36	30	10	3	12	82	8	22153-5-00003-R
36	30	10	3	12	82	12	22156-5-00003-R
36	30	10	4	12	82	8	22153-5-00004-R
36	30	10	4	12	82	12	22156-5-00004-R
36	30	10	5	16	82	8	22153-5-00005-R
36	30	10	5	16	82	12	22156-5-00005-R
36	30	10	11	12	82	8	22153-5-36011-R
36	30	10	11	12	82	12	22156-5-36011-R
Basic tool body (special profiles) without tips and without guide set							
36	30	10			72	8	22153-0-30000-R
36	30	10			72	12	22156-0-30000-R

Technical details
With two reversible TC tips, profiled on both sides, with shear angle.
If required the ball bearing guide set can be removed and replaced by a covering screw.
Right-hand rotation. For manual feed.

Application
For cutting hardwood, compressed wood and various kinds of wood composites.

Quantity discounts, ordering same profile: 5 - 9 pcs. = 12%, up from 10 pcs. = 25 %.
Template costs: see page 7.32

Spare parts / Accessories		Part-No.
Profile tip, TC	30 x 14,5 x 1,5 mm, Profile No. 1	72149-6-00001-R
Profile tip, TC	30 x 14,5 x 1,5 mm, Profile No. 2	72149-6-00002-R
Profile tip, TC	30 x 14,5 x 1,5 mm, Profile No. 3	72149-6-00003-R
Profile tip, TC	30 x 14,5 x 1,5 mm, Profile No. 4	72149-6-00004-R
Profile tip, TC	30 x 14,5 x 1,5 mm, Profile No. 5	72149-6-00005-R
Profile tip, TC	30 x 14,5 x 1,5 mm, Profile No. 11	72149-6-30011-R
Blank, TC	30 x 14,5 x 1,5 mm, 2-sided, unprofiled	72149-6-30000-R
Profile tip, TC	30 x 14,5 x 1,5 mm, special profile	72149-6-30001-R
Guide set	12 mm ø, complete	39064-0-09012-R
Guide set	16 mm ø, complete	39064-0-09016-R
Torx clamping screw	M 4 x 5,9, extra-large head, T15	39076-0-04000-R
Covering screw	M 3,5 x 6,0 mm, (special accessory)	39052-0-03500-R
Torx key	T15, with flag	39077-0-04015-1

Special profiles (on inquiry)

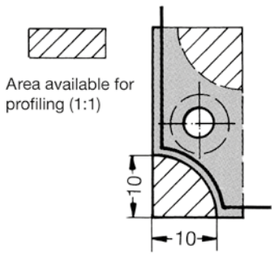

Standard profiles (1:1)

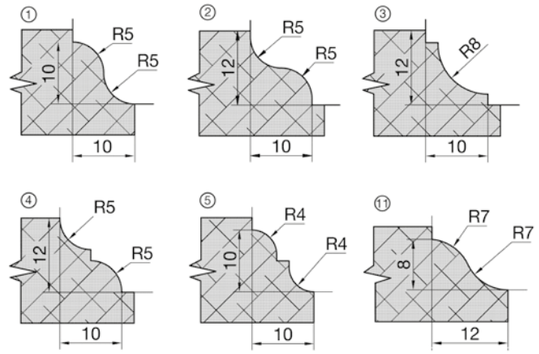

Tools for Portable Routers

Roman Ogee Cutters TCT Z2

interchangeable shank design

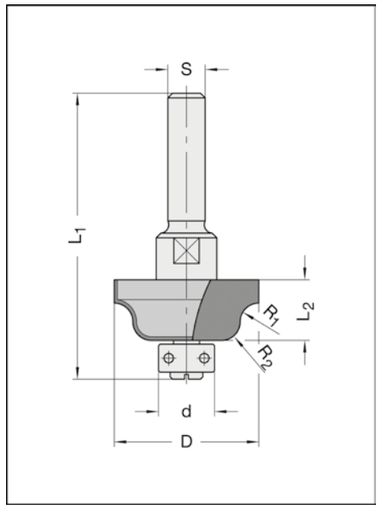

24640-5 with interchangeable ball bearing guide set

D mm	R_1/R_2 mm	L_2 mm	d mm	L_1 mm	Shank mm	Part-No.
31	4 / 4	13	12	56	6,35	24642-5-31040-R
31	4 / 4	13	12	61	8	24643-5-31040-R
31	4 / 4	13	12	61	12	24646-5-31040-R
37,2	6,35/6,35	19	12	62	6,35	24642-5-37063-R
37,2	6,35/6,35	19	12	67	8	24643-5-37063-R
37,2	6,35/6,35	19	12	67	12	24646-5-37063-R

Technical details
Two straight TCT cutting edges, cutting on bottom and periphery, with interchangeable ball bearing guide set. Right-hand rotation. For manual feed.

Application
For profiling of solid wood and panel materials.

Spare parts / Accessories		Part-No.
Guide set	12 mm ø, complete	39064-0-09012-R

Classical Cutters TCT Z2

interchangeable shank design

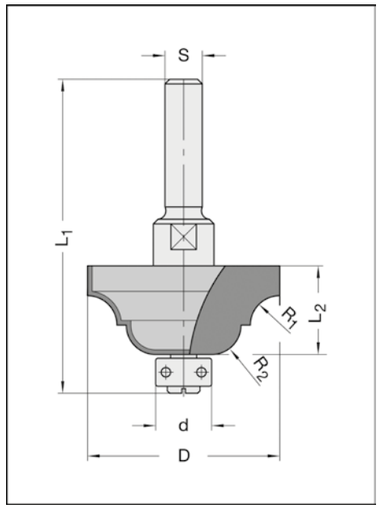

24700-5 with interchangeable ball bearing guide set

D mm	R_1/R_2 mm	L_2 mm	d mm	L_1 mm	Shank mm	Part-No.
41,2	6,35/6,35	19	12	62	6	24701-5-41963-R
41,2	6,35/6,35	19	12	62	6,35	24702-5-41963-R
41,2	6,35/6,35	19	12	67	8	24703-5-41963-R
41,2	6,35/6,35	19	12	67	10	24705-5-41963-R
41,2	6,35/6,35	19	12	67	12	24706-5-41963-R
Internal thread						
41,2	6,35/6,35	19	12	57	M 10	24707-5-41963-R
41,2	6,35/6,35	19	12	57	M 12 x 1	24708-5-41963-R

Technical details
Two straight TCT cutting edges, cutting on periphery only, with interchangeable ball bearing guide set. Right-hand rotation. For manual feed.

Application
For profiling of solid wood and panel materials.

Spare parts / Accessories		Part-No.
Guide set	12 mm ø, complete	39064-0-09012-R

Sunk Bead Cutters TCT Z2

interchangeable shank design

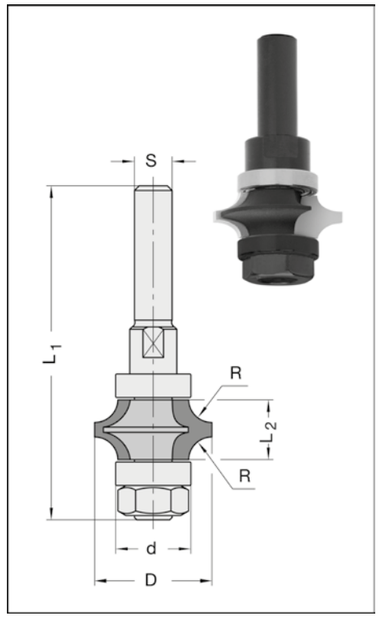

24811

D mm	R mm	L_2 mm	d mm	L_1 mm	Shank mm	Part-No.
25,4	4,8	12,7	16	66	6	24811-5-25401-R
25,4	4,8	12,7	16	71	8	24811-5-25400-R
25,4	4,8	12,7	16	71	10	24815-5-25400-R
25,4	4,8	12,7	16	71	12	24816-5-25400-R
Internal thread						
25,4	4,8	12,7	16	61	M 10	24817-5-25400-R
25,4	4,8	12,7	16	61	M 12 x 1	24818-5-25400-R

Technical details
Two TCT cutting edges. With interchangeable guide set. Quarter round without profile clearance. Right-hand rotation. For manual feed.

Application
For cutting corner beads, decorative grooves and for edge rounding useable. Application in wood composites and plastics.

Spare parts / Accessories		Part-No.
Interchangeable shank	S = 8 mm	39513-0-00000-R
Ball bearing	16 mm ø, d= 6,0 mm	39050-0-16008-0
Hexagon nut	M 8, ISO 4032	39150-0-08000-R

Raised Panel Cutter TCT Z2

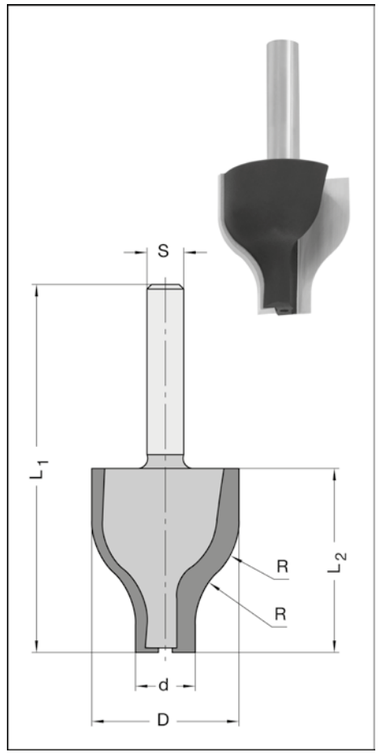

24800

D mm	R mm	L_2 mm	d mm	L_1 mm	Shank mm	Part-No.
32	16/16	40	13	80	8 x 30	24800-5-32000-R

Technical details
Two TCT cutting edges, cutting on bottom and periphery. Right-hand rotation. Manual feed.

Application
For cutting of raised panels and for bevelling of profiles on wood composites and plastics.

Collet Chucks

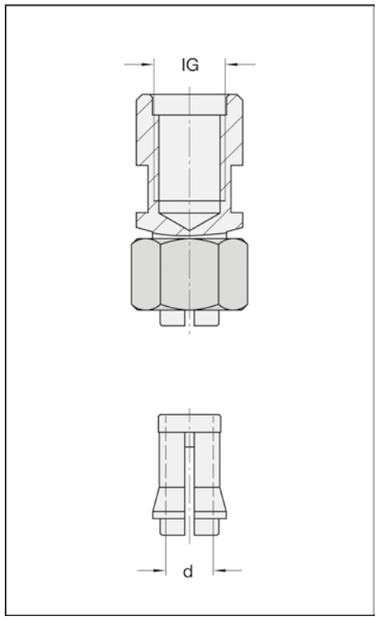

39400 3-piece design, complete

d mm	For size	Chuck thread	Part-No.
8	1	M 10	39407-0-08000-R
8	1	M 12 x 1	39408-0-08000-R
10	2	M 12 x 1	39408-0-10000-R
12	3	M 12 x 1	39408-0-12000-R

Technical details
Collet chuck consisting of chuck with internal thread, collet and nut. For right-hand rotation. Manual feed.

Application
Suitable for router cutter with cylindrical shank

Spare parts / Accessories		Part-No.
Collet	d= 6 mm	39401-0-06000-R
Collet	d= 8 mm	39401-0-08000-R
Collet	d= 10 mm	39401-0-10000-R
Collet	d= 12 mm	39401-0-12000-R
Nut	size 1 (4 - 8 mm)	39403-0-01000-R
Nut	size 2 (9 - 10 mm)	39403-0-02000-R
Nut	size 3 (12 - 13 mm)	39403-0-03000-R

Reduction pieces

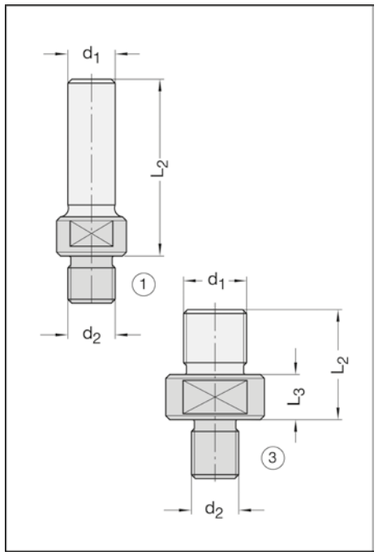

39500

d_1 mm	d_2 mm	L_2 mm	L_3 mm	Illustration No.	Part-No.
10 x 35	M 12 x 1	45	-	1	39505-0-10035-R
12 x 35	M 12 x 1	45	-	1	39505-0-12035-R
M 16 x 1,5	M 12 x 1	28	11,5	3	39507-0-00000-R
10 x 35	M 10	45	-	1	39506-0-10035-R
12 x 35	M 10	45	-	1	39507-0-12035-R

Technical details / application
For router cutter with internal thread used on portable routers.

Interchangeable Shanks

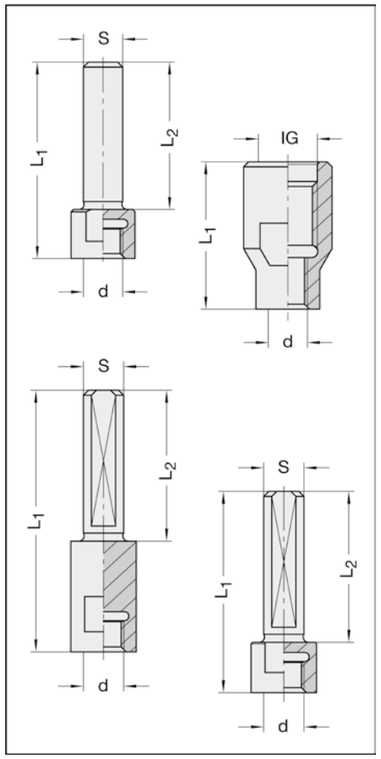

39510

Shank mm	d mm	L_2 mm	L_1 mm	Part-No.
6	M 8 x 1	25	35	39511-0-00000-R
6,35 (1/4)	M 8 x 1	25	35	39512-0-00000-R
8	M 8 x 1	30	40	39513-0-00000-R
8*	M 8 x 1	40	50	39513-0-00050-R
10	M 8 x 1	30	40	39515-0-00000-R
12	M 8 x 1	30	40	39516-0-00000-R
12,7 (½")	M 8 x 1	40	50	39510-0-00127-R
M 10	M 8 x 1	-	30	39517-0-00000-R
M 12 x 1	M 8 x 1	-	30	39518-0-00000-R

* To be used with arbor 24190 (page 1.32)

Technical details
With internal thread (IG) - without **clamping** flat.

Application
Suitable to all JSO router cutters with interchangeable shank design. For right-hand rotation.

39520

Shank mm	d mm	L_2 mm	L_1 mm	Part-No.
10	M 8 x 1	28	37,5	39520-0-05500-R
10	M 8 x 1	30	40	39520-0-05800-R
10	M 8 x 1	28	52,5	39520-0-07000-R

Technical details
With internal thread (IG) - complete **with** clamping flat and length adjusting screw.

Application
Suitable to all JSO-cutters with interchangeable shank design, and to V-grooving and engraving cutters No. 24540-5 as well as to No. 24540-6 (page 1.12) or No. 34540-6 (page 2.38). For right-hand rotation.

Slotted Bushings

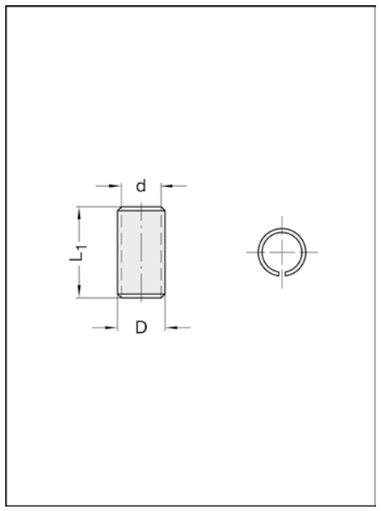

39210

d mm	D mm	L_1 mm	Part-No.
6	8	25	39210-0-06008-0
6,35	8	25	39210-0-06308-0
8	10	25	39210-0-08010-0
8	12	25	39210-0-08012-0
10	12	25	39210-0-10012-0

Technical details / application
As reducing bush between tool shank and collet on portable routers.

DIAFORM-PCD Router Cutters Z2

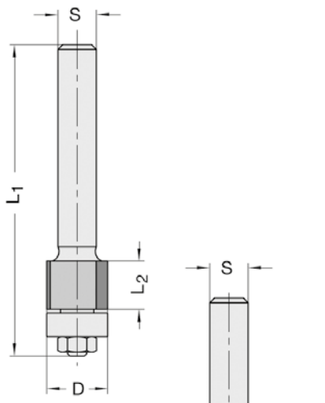

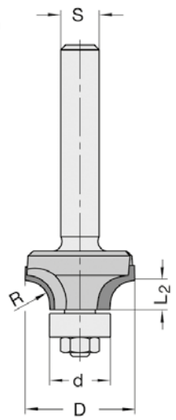

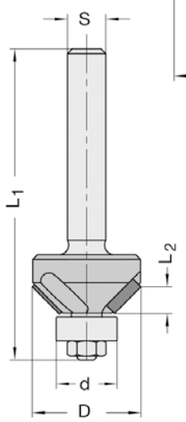

11000

D mm	L_2 mm	d mm	L_1 mm	R/angle mm/ °	Shank mm	Part-No.
12,7	10	12,7	65	-	8 x 40	11000-9-12710-R
20	4,2	12,7	65	3	8 x 40	11000-9-20030-R
23	6,1	12,7	65	5	8 x 40	11000-9-23050-R
22,8	5,1	12,7	65	45°	8 x 40	11000-9-22845-R

Technical details

PCD tipped router cutters for use on portable routers, cutting on periphery, with shear cut. Rounding over cutter with flair on both sides. Exchangeable ball bearing.
Square trimming cutter and rounding over cutters regrindable one time. Continued use with smaller ball bearing. The ball bearing with Ø 12,3 mm is included (in delivery). Bevel cutter regrindable several times. Continued use with the same ball bearing. Right-hand rotation. Manual feed.

Application

For easy cutting operation on abrasive materials, e.g. Corian, Varicor or HPL.

Application data:
For a long tool life of the PCD-tipped router cutters, an especially careful us is required. To avoid break-out on cutting edge, pay attention to a smooth locating and constant feed rate. Clamping of tools as far as possible.

Spare parts / Accessories		Part-No.
Ball bearing	12,7 mm ø, d= 4,76 mm	39050-0-12700-0
Ball bearing	12,3 mm ø, d= 4,76 mm	39062-0-12300-0
Hexagon nut	M 4	39150-0-04000-R

Square trimming cutter

Rounding over cutter

Bevel cutter

Drills

Precision creates value

2

Quick-Change Adaptors

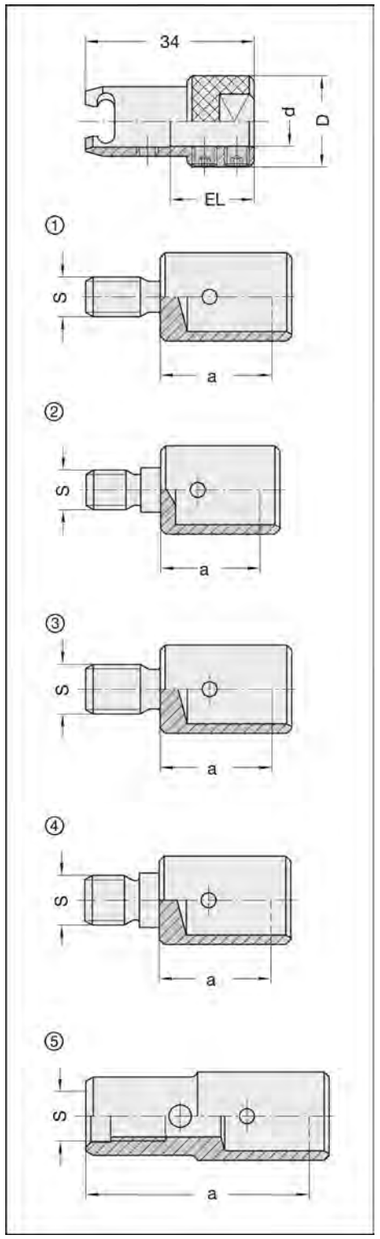

21300 drill holder

d mm	D mm	EL mm	Part-No.
10	17,8	17,5	21300-0-10175-0

21312-21340 machine adaptors

d mm	a mm	Machine	Part-No.
Ill. No. 1, shank: M 8 external thread			
10	22,5	Nottmeyer (former design)	21312-0-10000-R
10	22,5	Nottmeyer (former design)	21312-0-10000-L
Ill. No. 2, shank: M 8, register d= 9 mm			
10	20	Brema, Nottmeyer (new design)	21314-0-10000-R
10	20	Brema, Nottmeyer (new design)	21314-0-10000-L
Ill. No. 3, shank: M 10 external thread			
10	22,5	Ayen, Holzma, Mayer, Torwegge, etc.	21316-0-10000-R
10	22,5	Ayen, Holzma, Mayer, Torwegge, etc.	21316-0-10000-L
Ill. No. 4, shank: M10 external thread, register d= 11 mm			
10	22,5	Biesse, Busellato, Morbidelli, Torwegge, Weeke, etc.	21322-0-10000-R
10	22,5	Biesse, Busellato, Morbidelli, Torwegge, Weeke, etc.	21322-0-10000-L
Ill. No. 5, shank: M 10 external thread			
10	45	Scheer	21340-0-10000-R
10	45	Scheer	21340-0-10000-L

Technical details / Application

Two-piece design, consisting of machine adaptor and drill holder, providing a system for quick changing of boring bits, adaptable to a variety of different spindle nose designs. Two clamping screws.

Spare parts / Accessories		Part-No.
Lubricating grease	in tin	21460-0-00000-0
Socket spanner	for machine adaptor	39073-0-00800-0
Allen screw	M 5 x 4 ISO 4029	39070-0-05040-R
Allen key	SW 2,5, hexagon	39120-0-02500-0
Plastic protection cap	for d =10 mm	21450-0-10000-0
Plastic protection cap	for d = 8 mm	21450-0-08000-0

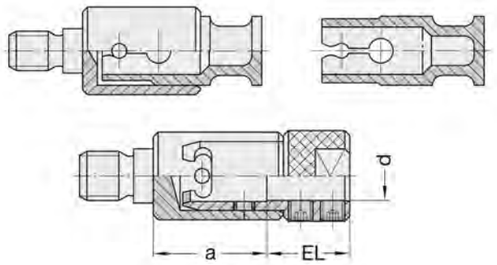

Adaptors

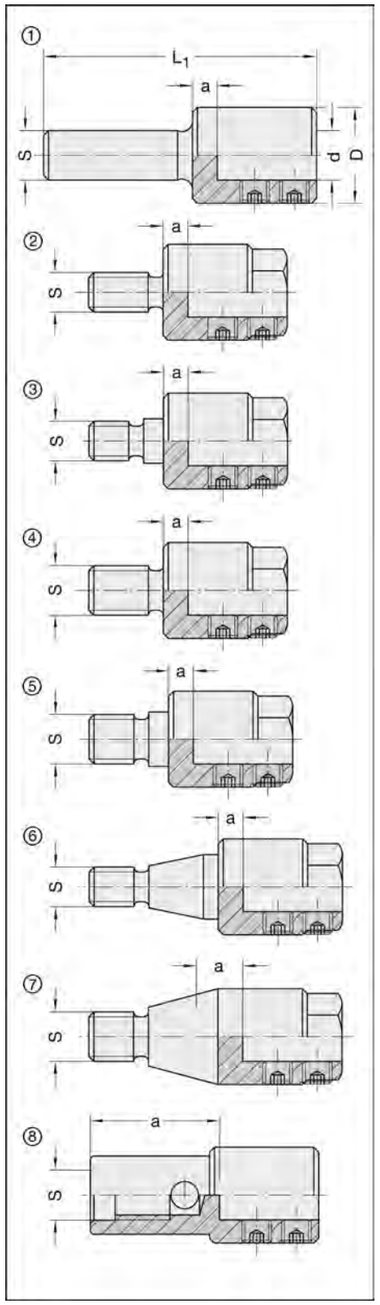

21250 - 21280

d mm	L_1 mm	a mm	Machine	Part-No.
Ill. No. 1, shank: 10 x 30 mm cylindrical				
10	55	7	D = 19 mm	21250-0-10000-0
Ill. No. 2, shank: M8 external thread				
10	40	5	Nottmeyer (former design)	21252-0-10040-R
10	40	5	Nottmeyer (former design)	21252-0-10040-L
Ill. No. 3, shank: M8 external thread, register d= 9 mm				
10	40	5	Brema, Nottmeyer (new design)	21254-0-10040-R
10	40	5	Brema, Nottmeyer (new design)	21254-0-10040-L
10	52	17	Brema, Nottmeyer (new design)	21254-0-10052-R
10	52	17	Brema, Nottmeyer (new design)	21254-0-10052-L
8	52	17	Brema, Nottmeyer (new design)	21254-0-08052-R
8	52	17	Brema, Nottmeyer (new design)	21254-0-08052-L
Ill. No. 4 shank: M10 external thread				
10	40	5	Ayen, Biesse, Holzma, Mayer, Torwegge, etc.	21256-0-10040-R
10	40	5	Ayen, Biesse, Holzma, Mayer, Torwegge, etc.	21256-0-10040-L
Ill. No. 5, shank: M 10 external thread, register d= 11 mm				
10	41	5	Biesse, Busellato, Morbidelli, Torwegge, Weeke, Vitap up from 4/91, etc.	21262-0-10041-R
10	41	5	Biesse, Busellato, Morbidelli, Torwegge, Weeke, Vitap up from 4/91, etc.	21262-0-10041-L
8	41	5	Biesse, Busellato, Morbidelli, Torwegge, Weeke, etc.	21262-0-08041-R
8	41	5	Biesse, Busellato, Morbidelli, Torwegge, Weeke, etc.	21262-0-08041-L
Ill. No. 6, shank: M8 external thread, centering cone 20° 48´				
10	51	8,5	Bilek, type K and N	21270-0-10051-R
10	51	8,5	Bilek, type K and N	21270-0-10051-L
Ill. No. 7, shank: M 10 external thread, centering cone 30°				
10	47	9,3	Alberti, Balestrini, Bilek, Schleicher, Vitap up to 3/91, etc.	21272-0-10047-R
10	47	9,3	Alberti, Balestrini, Bilek, Schleicher, Vitap up to 3/91, etc.	21272-0-10047-L
Ill. No. 8, shank: M 10 internal thread				
10	46	27	Scheer	21280-0-10046-R
10	46	27	Scheer	21280-0-10046-L

Technical details / Application

Designed as an adaptor chuck between spindle nose and drill shank. Two clamping screws.
D = 19 mm (d = 10 mm), resp. D = 15,5 mm (d = 8 mm).

Spare parts / Accessories		Part-No.
Allen screw	M 6 x 4	39070-0-06040-R
Allen key	SW 3	39120-0-03000-0

Quick-Change Adaptors

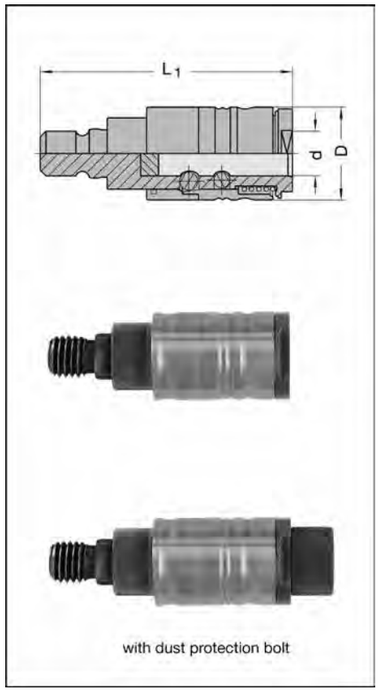

21480

d mm	D mm	L_1 mm	Shank mm	Register mm	Part-No.
10	20	56,5	M 7	9	21480-0-21256-R
10	20	56,5	M 7	9	21480-0-21256-L
10	20	56,5	M 8	9	21480-0-21156-R
10	20	56,5	M 8	9	21480-0-21156-L
10	20	56,5	M 10	11	21480-0-21056-R
10	20	56,5	M 10	11	21480-0-21056-L

Technical details

Retention mechanism with sliding sleeve and magnet-assisted clamping.

Application

For keyless changing of drilling tools with 10 mm shank diameter, clamping flat and standard length adjusting screw. Chuck without built-in drilling tools must be covered against pollution with optional available dust protection bolts.

Specific advantages

- Insertion assisted by magnetism
- Short stroke of the sliding sleeve
- Improved concentricity
- Smooth running
- Special length adjusting screw not necessary

Spare parts / Accessories		Part-No.
Dust protection bolt	d = 10 mm	21480-0-00001-0
Plastic protection cap	D = 22 mm	21480-0-10000-0

Quick-Change Adaptors

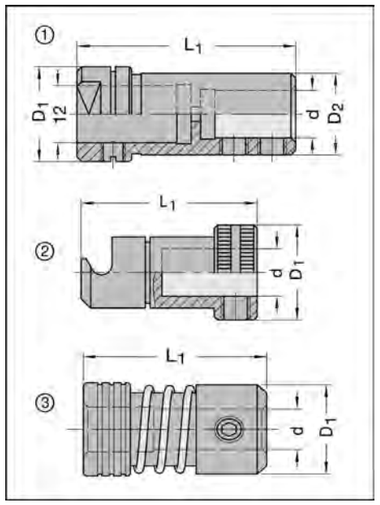

21290 - 21296

d mm	D_2 mm	D_1 mm	L_1 mm	Part-No.
For Weeke, Ill. No. 1				
10	17,2	20	46	21290-0-10000-0
For Biesse, Ill. No. 2				
10	-	20	37	21295-0-10000-R
10	-	20	37	21295-0-10000-L
For Grass, Ill. No. 3				
10	-	20	39	21296-0-10000-0

Technical details / Application

Designed as an adapter chuck between spindle nose and drill shank.

Spare parts / Accessories		Part-No.
Allen screw	M 6 x 5 ISO 4029 (for Weeke/Grass)	39070-0-06050-R
Allen screw	M 6 x 6 ISO 4029 (for Biesse)	39070-0-06060-R
Allen key	SW 3	39120-0-03000-0

Bushings for Twist Drills

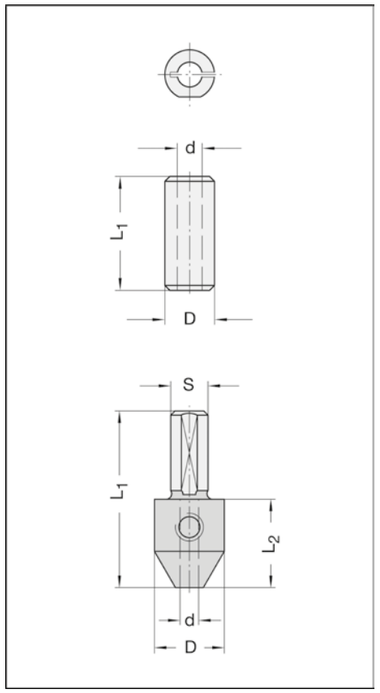

39220 split adaptor bushings

d mm	D mm	L_1 mm	Part-No.
2	10	25	39220-0-02000-0
2,5	10	25	39220-0-02500-0
3	10	25	39220-0-03000-0
3,5	10	25	39220-0-03500-0
4	10	25	39220-0-04000-0
5	10	25	39220-0-05000-0
6	10	25	39220-0-06000-0

39225 adaptor bushings with parallel shank

d mm	D mm	L_2 mm	L_1 mm	Shank mm	Part-No.
2	15	19	40	10 x 21	39225-0-02000-0
2,5	15	19	40	10 x 21	39225-0-02500-0
3	15	19	38	8 x 19	39225-0-03008-0
3	15	19	40	10 x 21	39225-0-03000-0
3,5	15	19	40	10 x 21	39225-0-03500-0
4	15	19	40	10 x 21	39225-0-04000-0
5	15	19	40	10 x 21	39225-0-05000-0

Technical details / Application
To take twist drill No. 30120 (page 2.5) and boring pin No. 20005 (page 2.6).
Shank with clamping flat, without length adjusting screw.
Can be used for either right-hand or left-hand rotation.

Spare parts / Accessories		Part-No.
Allen screw	M 6 x 5 ISO 4029	39070-0-06050-R
Allen key	SW 3	39120-0-03000-0
Length adjusting screw	M 5 x 8	39075-0-05080-R
Length adjusting screw	M 5 x 17, special design*	39075-0-05017-R

*see page 2.6

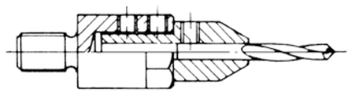

Used in standard adaptor

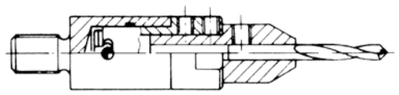

Used in quick-change adaptor

Twist Drills solid TC

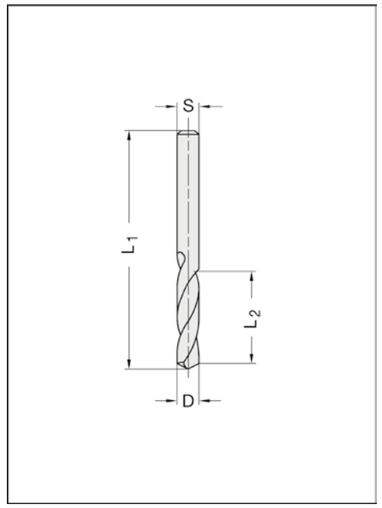

30120 common shank and drilling diameter

D mm	L_2 mm	L_1 mm	Part-No.
2	12	38	30120-6-02000-L
2	12	38	30120-6-02000-R
2,5	14	43	30120-6-02500-L
2,5	14	43	30120-6-02500-R
3	16	46	30120-6-03000-L
3	16	46	30120-6-03000-R
3	27	46	30120-6-03027-L
3	27	46	30120-6-03027-R
3,5	20	52	30120-6-03500-L
3,5	20	52	30120-6-03500-R
3,5	30	52	30120-6-03530-L
3,5	30	52	30120-6-03530-R
4	22	58	30120-6-04000-L
4	22	58	30120-6-04000-R
4	32	58	30120-6-04032-L
4	32	58	30120-6-04032-R
5	26	58	30120-6-05000-L
5	26	58	30120-6-05000-R
5	35	58	30120-6-05035-L
5	35	58	30120-6-05035-R

Technical details / Application
Solid TC, V-point 120°, common shank and drilling diameter. For use in adaptor bushes No. 39220/39225.

Drills

Boring Pins solid TC

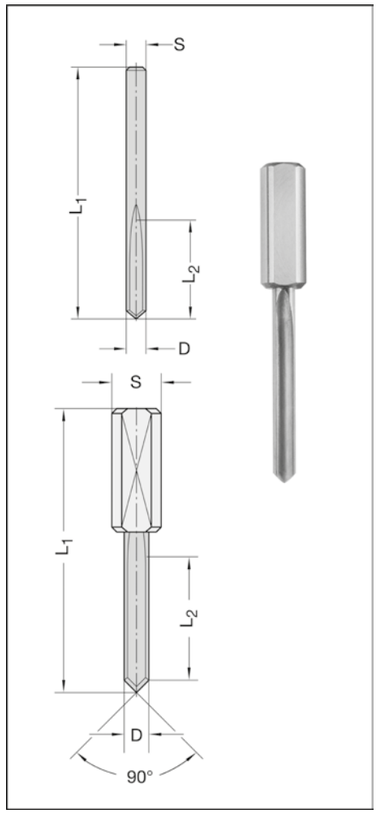

20005

D mm	L_2 mm	L_1 mm	Shank mm	Part-No.
Common shank and drilling diameter [1])				
2,0	12	38	2,0	20005-6-02000-0
2,5	15	45	2,5	20005-6-02500-0
3,0	15	45	3,0	20005-6-03000-0
3,0	23	48	3,0	20005-6-03023-0
3,5	15	45	3,5	20005-6-03500-0
3,5	30	55	3,5	20005-6-03530-0
4,0	20	45	4,0	20005-6-04000-0
4,0	32	57,5	4,0	20005-6-04032-0
Shank 10 mm, overall length 57,5 mm				
2,5	15	57,5	10 x 33	20005-6-02515-0
3,0	15	57,5	10 x 33	20005-6-03015-0
3,5	15	57,5	10 x 33	20005-6-03515-0
4,0	20	57,5	10 x 25	20005-6-04020-0
5,0	25	57,5	10 x 25	20005-6-05025-0
6,0	25	57,5	10 x 25	20005-6-06025-0
8,0	25	57,5	10 x 25	20005-6-08025-0
Shank 10 mm, overall length = 70 mm				
2,5	15	70	10 x 33	20005-6-02570-0
3,0	23	70	10 x 33	20005-6-03070-0
3,5	30	70	10 x 33	20005-6-03570-0
4,0	32	70	10 x 25	20005-6-04070-0
5,0	35	70	10 x 25	20005-6-05035-0
6,0	35	70	10 x 25	20005-6-06035-0
8,0	35	70	10 x 25	20005-6-08035-0

1) To be used with adaptors No. 39225 (see page 2.4).

Technical details
Round tool body with special grade solid TC with one parallel flute and tapered point. D= 2 to 4 mm with common shank and clamping diameter, for use with adaptor No. 39225 or with solid shank 10 mm, with clamping flat and length ajusting screw. Up from D= 5 mm only with solid shank 10 mm.
Can be used for either right-hand or left-hand rotation.

Application
Especially recommended for drilling blind-holes in abrasive materials, as well as for material containing mineral components. Also applicable for dry, solid woods.
For use on automatic dowel hole boring machines or CNC machines.
The number of boring pins, which can be used together in one drilling aggregate, depends on the power of the machine.
Not applicable for HPL. For this see e.g. No. 30559-6 (page 2.8).

- Extremely long tool life which normally could only be achieved with diamond drills
- Applicable for right-hand and left-hand rotation
- Large regrinding area, modest regrinding costs

Spare parts / Accessories		Part-No.
Length adjusting screw	M 5 x 8	39075-0-05080-R
Length adjusting screw	M 5 x 17, special design*	39075-0-05017-R

*see page 2.7

Dowel Drills solid TC

with flat point & sickle-shaped spurs

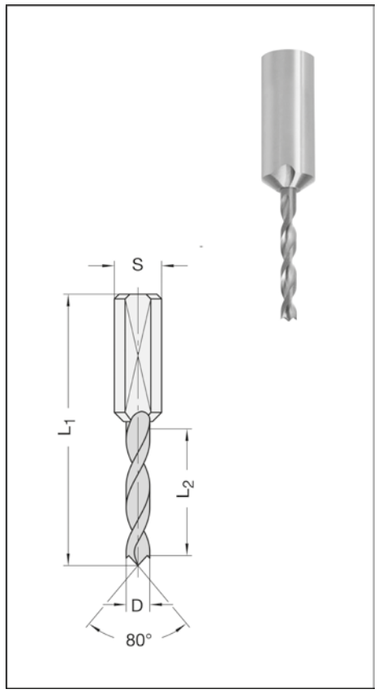

30550-6 parallel shank 10 mm

D mm	L_2 mm	Shank mm	Part-No.
Overall length 57,5 mm			
2,5	14	10 x 33	30550-6-02514-L
2,5	14	10 x 33	30550-6-02514-R
3	16	10 x 33	30550-6-03016-L
3	16	10 x 33	30550-6-03016-R
3,5	20	10 x 33	30550-6-03520-L
3,5	20	10 x 33	30550-6-03520-R
4	22	10 x 25	30550-6-04022-L
4	22	10 x 25	30550-6-04022-R
5	27	10 x 25	30550-6-05027-L
5	27	10 x 25	30550-6-05027-R
6	27	10 x 25	30550-6-06027-L
6	27	10 x 25	30550-6-06027-R
Overall length 70 mm			
3	27	10 x 33	30550-6-03027-L
3	27	10 x 33	30550-6-03027-R
3,5	30	10 x 33	30550-6-03530-L
3,5	30	10 x 33	30550-6-03530-R
4	32	10 x 25	30550-6-04032-L
4	32	10 x 25	30550-6-04032-R
5	35	10 x 25	30550-6-05035-L
5	35	10 x 25	30550-6-05035-R
6	35	10 x 25	30550-6-06035-L
6	35	10 x 25	30550-6-06035-R

Technical details
Solid TC spiral protion with flat centre point, shaped by the point angle and two negative ground, sickel-shaped spurs. Enlarged flutes. Parallel shank with clamping flat and length adjusting screw.

Application
For use in adaptor chucks etc. on dowel hole boring machines and CNC machines.
To drill blind-holes in solid wood, various kinds of panel materials etc., as well as in laminated materials.

- Improved tool life achieved through special wear resistant TC grade
- Minimal vibration stress through rigid solid TC design
- No break-outs when retracting the drill through non-stepped parallel spiral portion
- Maximum concentricity
- Reginding area considerably increased

Spare parts / Accessories		Part-No.
Length adjusting screw	M 5 x 8	39075-0-05080-R
Length adjusting screw	M 5 x 17, special design*	39075-0-05017-R

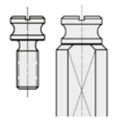

* For use in Leitz quick-change adaptors PM 320-0-55 to 58, a special length adjusting screw has to be mounted.
Shank and clamping flat diameter of the drills are specially designed for these adaptors.
Drills will be delivered complete with mounted special length adjusting screw, if simply ordered as an additional part (see "Accessories").

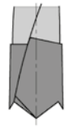

Point angle and reinforced spurs ensure sturdy, flat centre point and longer tool life.

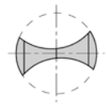

Enlarged flutes. Minor web thickness in the centre point area for reduced feed force and better chip removal.

Dowel Drills solid TC

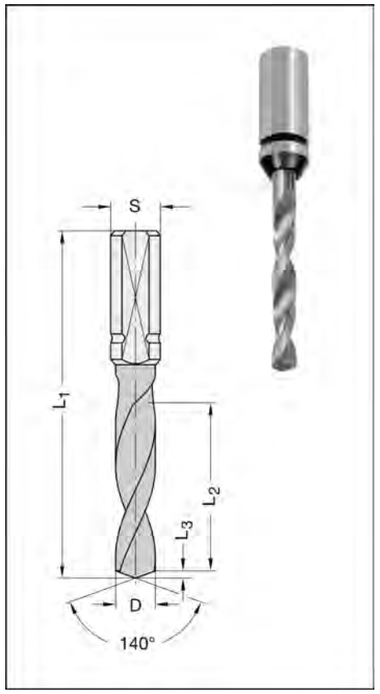

30559-6 cylindrical shank 10 mm

D mm	L_2 mm	L_3 mm	Shank mm	Part-No.
Overall length 57,5 mm				
3	20	0,5	10 x 28	30559-6-03020-L
3	20	0,5	10 x 28	30559-6-03020-R
4	23	0,7	10 x 24	30559-6-04023-L
4	23	0,7	10 x 24	30559-6-04023-R
5	23	0,9	10 x 24	30559-6-05023-L
5	23	0,9	10 x 24	30559-6-05023-R
6	25	1,1	10 x 24	30559-6-06025-L
6	25	1,1	10 x 24	30559-6-06025-R
8	25	1,5	10 x 25	30559-6-08025-L
8	25	1,5	10 x 25	30559-6-08025-R
10	25	1,8	10 x 25	30559-6-10025-L
10	25	1,8	10 x 25	30559-6-10025-R
Overall length 70 mm				
3	22	0,5	10 x 35	30559-6-03022-L
3	22	0,5	10 x 35	30559-6-03022-R
4	28	0,7	10 x 24	30559-6-04028-L
4	28	0,7	10 x 24	30559-6-04028-R
4,5	28	0,8	10 x 24	30559-6-04528-R
5	36	0,9	10 x 24	30559-6-05036-L
5	36	0,9	10 x 24	30559-6-05036-R
5,5	36	1,0	10 x 24	30559-6-05536-R
6	38	1,1	10 x 24	30559-6-06038-L
6	38	1,1	10 x 24	30559-6-06038-R
6,5	38	1,2	10 x 24	30559-6-06538-R
8	38	1,5	10 x 25	30559-6-08038-L
8	38	1,5	10 x 25	30559-6-08038-R
8,5	38	1,5	10 x 25	30559-6-08538-R
10	38	1,8	10 x 25	30559-6-10038-L
10	38	1,8	10 x 25	30559-6-10038-R
11	38	2,0	10 x 25	30559-6-11038-R

Technical details
Solid TC spiral with 140° V-point. Parallel shank with clamping flat and length adjusting screw.

Application
For drilling through-holes (on nesting machines) and blind-holes of wood composites and plastics on automatic boring machines and CNC-machines.
Especially for machining of HPL, Multiplex, laminated chip- and MDF-boards, as well as of solid wood.

- Improved tool life achieved through more wear resistant TC grade
- Vibration resistant thanks to solid TC
- No break-outs when retracting the drill through non-stepped parallel spiral portion
- Finely ground flutes for improved chip flow
- Regrinding area considerably increased

Spare parts / Accessories		Part-No.
Length adjusting screw	M 5 x 8	39075-0-05080-R
Length adjusting screw	M 5 x 17, special design*	39075-0-05017-R

* For use in Leitz quick-change adaptors PM 320-0-55 to 58, a special length adjusting screw has to be mounted. Shank and clamping diameter of the drills are specially designed for these adaptors. Drills will be delivered complete with mounted special length adjusting screw, if simply ordered as an additional part (see "Accessories").

ISODUR Dowel Drills TCT

with flat point & sickle-shaped spurs

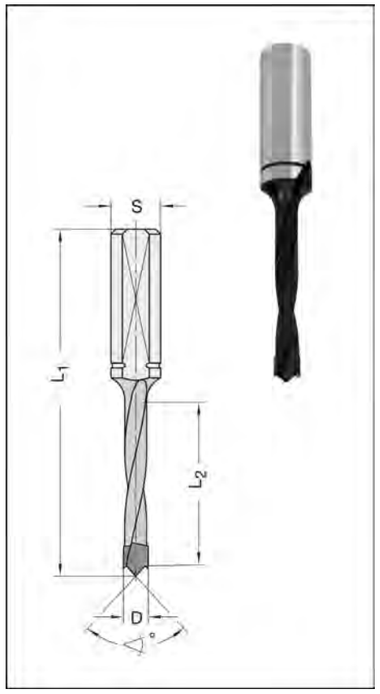

30555 parallel shank 10 mm

D mm	L_2 mm	Shank mm	Part-No.
Overall length 57,5 mm			
5	27	10 x 27	30555-5-05027-L
5	27	10 x 27	30555-5-05027-R
6	27	10 x 27	30555-5-06027-L
6	27	10 x 27	30555-5-06027-R
8	27	10 x 27	30555-5-08027-L
8	27	10 x 27	30555-5-08027-R
10	27	10 x 27	30555-5-10027-L
10	27	10 x 27	30555-5-10027-R
Overall length 70 mm			
5	35	10 x 30	30555-5-05035-L
5	35	10 x 30	30555-5-05035-R
6	35	10 x 30	30555-5-06035-L
6	35	10 x 30	30555-5-06035-R
7	35	10 x 30	30555-5-07035-L
7	35	10 x 30	30555-5-07035-R
8	35	10 x 30	30555-5-08035-L
8	35	10 x 30	30555-5-08035-R
10	35	10 x 30	30555-5-10035-L
10	35	10 x 30	30555-5-10035-R
12	35	10 x 30	30555-5-12035-L
12	35	10 x 30	30555-5-12035-R
Overall length 77 mm			
5	42	10 x 30	30555-5-05044-L
5	42	10 x 30	30555-5-05044-R
8	42	10 x 30	30555-5-08044-L
8	42	10 x 30	30555-5-08044-R

Technical details
Solid TC head with flat centre point shaped by the point angle and two scikel-shaped spurs. Enlarged flutes. Spiral portion Teflon-coated for reduced friction and better chip flow. Parallel shank with clamping flat and length adjusting screw. **Increased tool life** by wear resistant TC grade.

Application
For use in adaptor chucks, etc. on dowel hole boring machines and CNC machines to drill blind-holes in solid wood, various kinds of wood composites and boards etc. also in plastic laminated materials.

- increased tool life compared with traditional TCT dowel drills
- Set-up times can be enormously reduced for only a small extra costs

Spare parts / Accessories		Part-No.
Length adjusting screw	M 5 x 8	39075-0-05080-R
Length adjusting screw	M 5 x 17, special design*	39075-0-05017-R

* For use in Leitz quick-change adaptors PM 320-0-55 to 58, a special length adjusting screw has to be mounted. Shank and clamping diameter of the drills are specially designed for these adaptors. Drills will be delivered complete with mounted special length adjusting screw, if simply ordered as an additional part (see "Accessories").

Point angle and reinforced spurs ensure sturdy, flat centre point and longer tool life.

Enlarged flutes. Minor web thickness in the centre point area for reduced feed force and better chip removal.

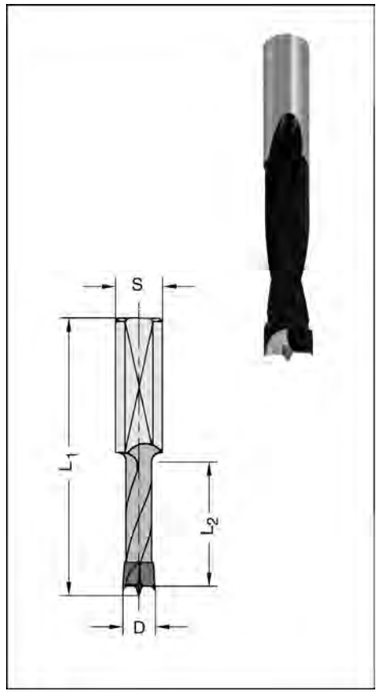

30540-5 parallel shank 10 x 27 mm

D mm	L_2 mm	Shank mm	Part-No.
Overall length 57,5 mm			
4	27	10 x 27	30540-5-04027-L
4	27	10 x 27	30540-5-04027-R
4,5	27	10 x 27	30540-5-04527-L
4,5	27	10 x 27	30540-5-04527-R
5	27	10 x 27	30540-5-05027-L
5	27	10 x 27	30540-5-05027-R
5,1	27	10 x 27	30540-5-05127-L
5,1	27	10 x 27	30540-5-05127-R
5,2	27	10 x 27	30540-5-05227-R
6	27	10 x 27	30540-5-06027-L
6	27	10 x 27	30540-5-06027-R
8	27	10 x 27	30540-5-08027-L
8	27	10 x 27	30540-5-08027-R
8,2	27	10 x 27	30540-5-08227-L
8,2	27	10 x 27	30540-5-08227-R
9	27	10 x 27	30540-5-09027-R
10	27	10 x 27	30540-5-10027-L
10	27	10 x 27	30540-5-10027-R
10,5	27	10 x 27	30540-5-10527-L
10,5	27	10 x 27	30540-5-10527-R
11	27	10 x 27	30540-5-11027-L
11	27	10 x 27	30540-5-11027-R
12	27	10 x 27	30540-5-12027-R

Spare parts / Accessories		Part-No.
Length adjusting screw	M 5 x 8	39075-0-05080-R
Length adjusting screw	M 5 x 17, special design*	39075-0-05017-R

* For use in Leitz quick-change adaptors PM 320-0-55 to 58, a special length adjusting screw has to be mounted. Shank and clamping diameter of the drills are specially designed for these adaptors. Drills will be delivered complete with mounted special length adjusting screw, if simply ordered as an additional part (see "Accessories").

Technical details

Solid TC head with centre point, two cutting edges and **negatively ground spurs. Increased back relief angle**. Spiral portion Teflon-coated for reduced friction and better chip flow. Parallel shank with clamping flat and length adjusting screw.

Application

For use in adaptor chucks, etc. on dowel hole boring machines and CNC machines to drill blind-holes in solid wood, various kinds of wood composites and boards etc., as well as in plastic laminated materials.

Negatively ground spurs for accurate holes and longer tool life

Increased back relief angle for reduced feed force and improved chip removal

Dowel Drills TCT without landed flute

Drills

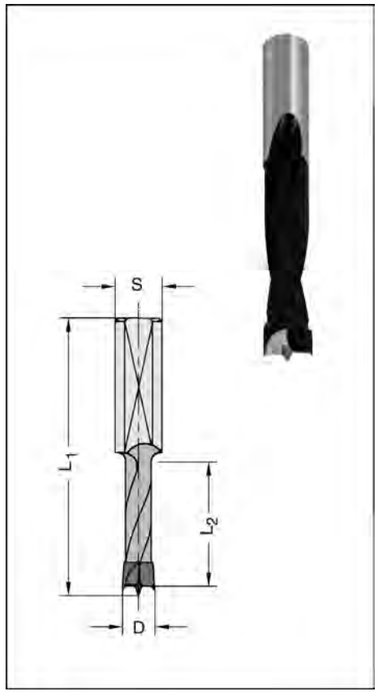

30540-5 parallel shank 10 x 30 mm

D mm	L_2 mm	Shank mm	Part-No.
Overal length 70 mm			
4	30	10 x 30	30540-5-04035-L
4	30	10 x 30	30540-5-04035-R
4,5	35	10 x 30	30540-5-04535-L
4,5	35	10 x 30	30540-5-04535-R
5	35	10 x 30	30540-5-05035-L
5	35	10 x 30	30540-5-05035-R
5,1	35	10 x 30	30540-5-05135-L
5,1	35	10 x 30	30540-5-05135-R
5,2	35	10 x 30	30540-5-05235-R
5,5	35	10 x 30	30540-5-05535-L
5,5	35	10 x 30	30540-5-05535-R
6	35	10 x 30	30540-5-06035-L
6	35	10 x 30	30540-5-06035-R
6,2	35	10 x 30	30540-5-06235-R
6,35	35	10 x 30	30540-5-06335-L
6,35	35	10 x 30	30540-5-06335-R
6,5	35	10 x 30	30540-5-06535-L
6,5	35	10 x 30	30540-5-06535-R
7	35	10 x 30	30540-5-07035-L
7	35	10 x 30	30540-5-07035-R
7,5	35	10 x 30	30540-5-07535-L
7,5	35	10 x 30	30540-5-07535-R
8	35	10 x 30	30540-5-08035-L
8	35	10 x 30	30540-5-08035-R
8,1	35	10 x 30	30540-5-08135-L
8,1	35	10 x 30	30540-5-08135-R
8,2	35	10 x 30	30540-5-08235-L
8,2	35	10 x 30	30540-5-08235-R
8,5	35	10 x 30	30540-5-08535-L
8,5	35	10 x 30	30540-5-08535-R
9	35	10 x 30	30540-5-09035-L
9	35	10 x 30	30540-5-09035-R
9,5	35	10 x 30	30540-5-09535-L
9,5	35	10 x 30	30540-5-09535-R
10	35	10 x 30	30540-5-10035-L
10	35	10 x 30	30540-5-10035-R
10,2	35	10 x 30	30540-5-10235-L
10,2	35	10 x 30	30540-5-10235-R
10,5	35	10 x 30	30540-5-10535-R
11	35	10 x 30	30540-5-11035-L
11	35	10 x 30	30540-5-11035-R
12	35	10 x 30	30540-5-12035-L
12	35	10 x 30	30540-5-12035-R
12,7	35	10 x 30	30540-5-12735-L
12,7	35	10 x 30	30540-5-12735-R
Overal length 77 mm			
5	44	10 x 30	30540-5-05044-L
5	44	10 x 30	30540-5-05044-R
6	44	10 x 30	30540-5-06044-L
6	44	10 x 30	30540-5-06044-R
8	44	10 x 30	30540-5-08044-L
8	44	10 x 30	30540-5-08044-R
10	44	10 x 30	30540-5-10044-L
10	44	10 x 30	30540-5-10044-R
12	44	10 x 30	30540-5-12044-L
12	44	10 x 30	30540-5-12044-R

Spare parts / Accessories		Part-No.
Length adjusting screw	M 5 x 8	39075-0-05080-R
Length adjusting screw	M 5 x 17, special design*	39075-0-05017-R

Technical details

Solid TC head with centre point, two cutting edges and **negatively ground spurs. Increased back relief angle.** Spiral portion Teflon-coated for reduced friction and better chip flow. Parallel shank with clamping flat and length adjusting screw.

Application

For use in adaptor chucks, etc. on dowel hole boring machines and CNC machines to drill blind-holes in solid wood, various kinds of wood composites and boards etc., as well as in plastic laminated materials.

Negatively ground spurs for accurate holes and longer tool life

Increased back relief angle for reduced feed force and improved chip removal

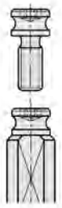

* For use in Leitz quick-change adaptors PM 320-0-55 to 58, a special length adjusting screw has to be mounted. Shank and clamping flat diameter of the drills are specially designed for these adaptors. Drills will be delivered complete with mounted special length adjusting screw, if simply ordered as an additional part (see "Accessories").

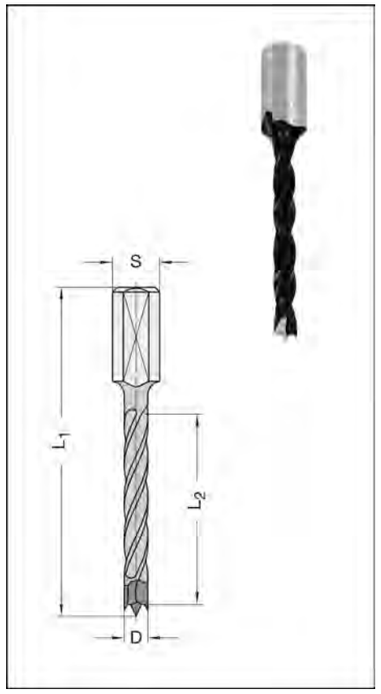

Negatively ground spurs for accurate holes and longer tool life

Increased back relief angle for reduced feed force and improved chip removal

* For use in Leitz quick-change adaptors PM 320-0-55 to 58, a special length adjusting screw has to be mounted. Shank and clamping flat diameter of the drills are specially designed for these adaptors. Drills will be delivered complete with mounted special length adjusting screw, if simply ordered as an additional part (see "Accessories").

30530-5 parallel shank 10 mm

D mm	L_2 mm	Shank mm	Part-No.
Overall length 57,5 mm			
5	30	10 x 20	30530-5-05030-L
5	30	10 x 20	30530-5-05030-R
6	30	10 x 20	30530-5-06030-L
6	30	10 x 20	30530-5-06030-R
7	30	10 x 20	30530-5-07030-L
7	30	10 x 20	30530-5-07030-R
8	30	10 x 20	30530-5-08030-L
8	30	10 x 20	30530-5-08030-R
10	30	10 x 20	30530-5-10030-L
10	30	10 x 20	30530-5-10030-R
12	30	10 x 20	30530-5-12030-L
12	30	10 x 20	30530-5-12030-R
15	30	10 x 20	30530-5-15030-R
Overall length 70 mm			
5	43	10 x 20	30530-5-05043-L
5	43	10 x 20	30530-5-05043-R
5,5	43	10 x 20	30530-5-05543-L
5,5	43	10 x 20	30530-5-05543-R
6	43	10 x 20	30530-5-06043-L
6	43	10 x 20	30530-5-06043-R
7,5	43	10 x 20	30530-5-07543-R
8	43	10 x 20	30530-5-08043-L
8	43	10 x 20	30530-5-08043-R
8,2	43	10 x 20	30530-5-08243-R
9	43	10 x 20	30530-5-09043-L
9	43	10 x 20	30530-5-09043-R
10	43	10 x 20	30530-5-10043-L
10	43	10 x 20	30530-5-10043-R
12	43	10 x 20	30530-5-12043-L
12	43	10 x 20	30530-5-12043-R
12,2	43	10 x 20	30530-5-12243-R
13	43	10 x 20	30530-5-13043-L
13	43	10 x 20	30530-5-13043-R
14	43	10 x 20	30530-5-14043-L
14	43	10 x 20	30530-5-14043-R
15	43	10 x 20	30530-5-15043-L
15	43	10 x 20	30530-5-15043-R
16	43	10 x 20	30530-5-16043-L
16	43	10 x 20	30530-5-16043-R

Technical details

Solid TC head with centre point, two cutting edges and **negatively ground spurs. Increased back relief angle.** Spiral portion Teflon-coated, with landed flute. Parallel shank with clamping flat and length adjusting screw.

Application

For use in adaptor chucks, etc. on dowel hole boring machines and CNC machines to drill blind-holes in solid wood and panel materials etc., as well as in laminated materials.

The landed flute (heel) provides
- improved centering on return stroke
- permits infinitely variable mounting of the countersink directly on the spiral portion of the drill

Spare parts / Accessories		Part-No.
Length adjusting screw	M 5 x 8	39075-0-05080-R
Length adjusting screw	M 5 x 17, special design*	39075-0-05017-R

Dowel Drills TCT with landed flute

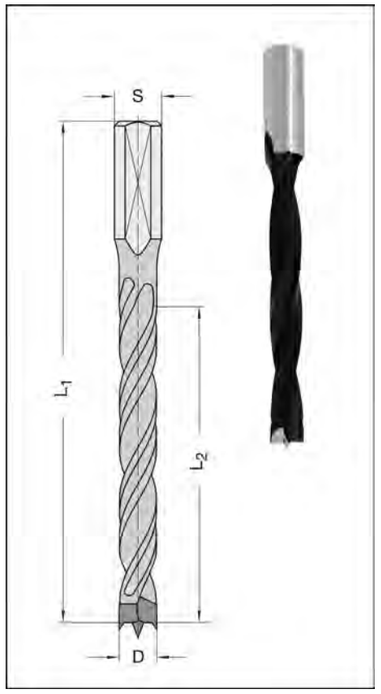

30145-5 parallel shank 10 mm

D mm	L_2 mm	Shank mm	Part-No.
Overal length 85 mm			
5	45	10 x 30	30145-5-05045-L
5	45	10 x 30	30145-5-05045-R
6	45	10 x 30	30145-5-06045-L
6	45	10 x 30	30145-5-06045-R
7	45	1 0 x 30	30145-5-07045-L
7	45	10 x 30	30145-5-07045-R
8	45	10 x 30	30145-5-08045-L
8	45	10 x 30	30145-5-08045-R
10	45	10 x 30	30145-5-10045-L
10	45	10 x 30	30145-5-10045-R
12	45	10 x 30	30145-5-12045-L
12	45	10 x 30	30145-5-12045-R
Overal length 105 mm			
5	65	10 x 30	30145-5-05065-L
5	65	10 x 30	30145-5-05065-R
6	65	10 x 30	30145-5-06065-L
6	65	10 x 30	30145-5-06065-R
6,5	65	10 x 30	30145-5-06565-R
7	65	10 x 30	30145-5-07065-L
7	65	10 x 30	30145-5-07065-R
7,5	65	10 x 30	30145-5-07565-R
8	65	10 x 30	30145-5-08065-L
8	65	10 x 30	30145-5-08065-R
8,5	65	10 x 30	30145-5-08565-R
9	65	10 x 30	30145-5-09065-R
10	65	10 x 30	30145-5-10065-L
10	65	10 x 30	30145-5-10065-R
11	65	10 x 30	30145-5-11065-R
12	65	10 x 30	30145-5-12065-L
12	65	10 x 30	30145-5-12065-R
14	65	10 x 30	30145-5-14065-L
14	65	10 x 30	30145-5-14065-R
Overal length 110 mm			
16	80	10 x 25	30145-5-16080-L
16	80	10 x 25	30145-5-16080-R
Overal length 130 mm			
14	98	10 x 25	30145-5-14098-L
14	98	10 x 25	30145-5-14098-R
16	98	10 x 25	30145-5-16098-R

Technical details

Solid TC head with centre point, two cutting edges and **negatively ground spurs. Increased back relief angle.** Spiral portion Teflon-coated, with landed flute. Parallel shank with clamping flat and length adjusting screw.

Application

For use in adaptor chucks, etc. on dowel hole boring machines and CNC machines to drill blind-holes in solid wood and panel materials etc., as well as in laminated materials.

The landed flute (heel) provides
- improved centering on return stroke
- permits infinitely variable mounting of the countersink directly on the spiral portion of the drill

Dowel Drills HS

with landed flute

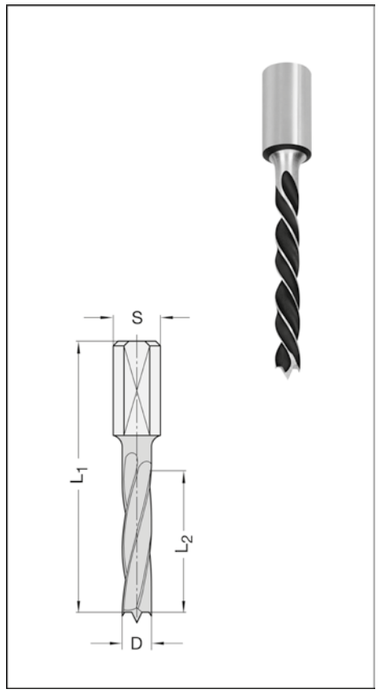

30530-4 parallel shank 10 mm

D mm	L_2 mm	Shank mm	Part-No.
Overall length 70 mm			
5	43	10 x 20	30530-4-05043-L
5	43	10 x 20	30530-4-05043-R
6	43	10 x 20	30530-4-06043-L
6	43	10 x 20	30530-4-06043-R
8	43	10 x 20	30530-4-08043-L
8	43	10 x 20	30530-4-08043-R

Technical details
Two cutting edges with ground spurs and centre point.
Parallel shank with clamping flat, without length adjusting screw.

Application
For use in adaptor chucks, etc. on dowel hole boring machines or CNC machines.
For drilling blind-holes in solid wood.

Dowel Drills HS

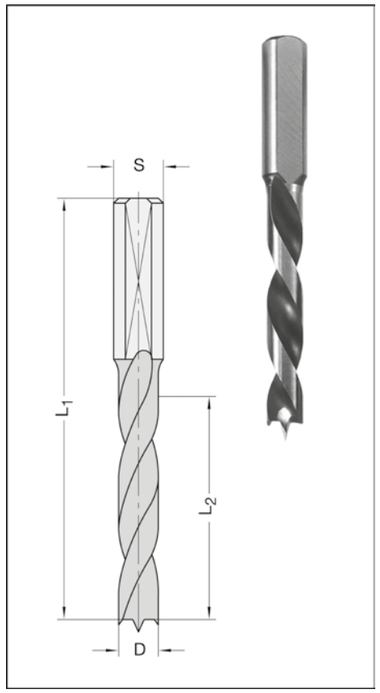

30145-4 parallel shank 10 mm

D mm	L_2 mm	Shank mm	Part-No.
Overal length 85 mm			
5	45	10 x 30	30145-4-05045-R
8	45	10 x 30	30145-4-08045-L
8	45	10 x 30	30145-4-08045-R

Technical details
Two cutting edges with ground spurs and centre point.
Parallel shank with clamping flat, without length adjusting screw. Spiral portion without landed flute.

Application
For use in adaptor chucks, etc. on dowel hole boring machines or CNC machines.
For drilling blind-holes in solid wood.

Dowel Drills TCT

with landed flute

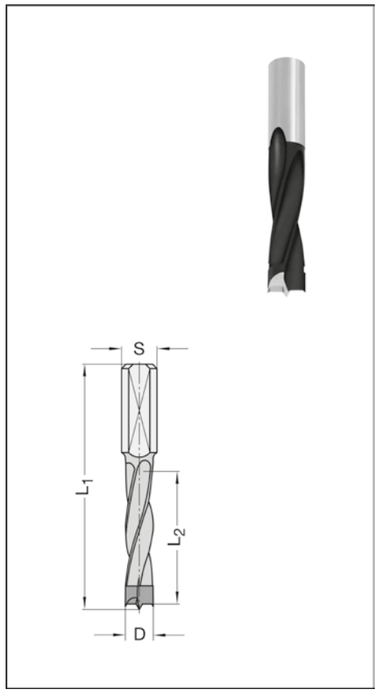

30510 parallel shank 8 x 20 mm

D mm	L_2 mm	Shank mm	Part-No.
Overall length 55,5 mm			
4	30	8 x 20	30510-5-04030-L
4	30	8 x 20	30510-5-04030-R
5	30	8 x 20	30510-5-05030-L
5	30	8 x 20	30510-5-05030-R
6	30	8 x 20	30510-5-06030-L
6	30	8 x 20	30510-5-06030-R
8	30	8 x 20	30510-5-08030-L
8	30	8 x 20	30510-5-08030-R
10	30	8 x 20	30510-5-10030-L
10	30	8 x 20	30510-5-10030-R
12	30	8 x 20	30510-5-12030-R
Overall length 67 mm			
4	40	8 x 20	30510-5-04040-R
5	40	8 x 20	30510-5-05040-L
5	40	8 x 20	30510-5-05040-R
6	40	8 x 20	30510-5-06040-L
6	40	8 x 20	30510-5-06040-R
8	40	8 x 20	30510-5-08040-L
8	40	8 x 20	30510-5-08040-R
10	40	8 x 20	30510-5-10040-L
10	40	8 x 20	30510-5-10040-R
12	40	8 x 20	30510-5-12040-R

Technical details
Solid TC head with centre point, two cutting edges and **negatively ground spurs. Increased back relief angle.**
Spiral portion Teflon-coated, with landed flute. Parallel shank with clamping flat and length adjusting screw.

Application
For use in adaptor chucks etc. on dowel hole drilling machines and CNC machines, to drill blind-holes in solid wood and panel materials etc., as well as in laminated materials.

The landed flute (heel) provides
- improved centering on return stroke
- permits infinitely variable mounting of the countersink directly on the spiral portion of the drill

Spare parts / Accessories		Part-No.
Length adjusting screw	M 5 x 8	39075-0-05080-R
Length adjusting screw	M 5 x 17, special design*	39075-0-05017-R

*see page 2.7

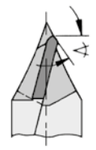

Negatively ground spurs for accurate holes and longer tool life

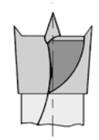

Increased back relief angle for reduced feed force and improved chip removal

Through hole Drills TCT

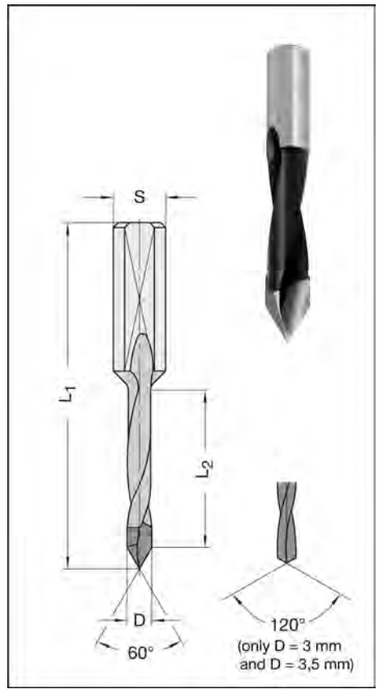

30566 parallel shank 10 mm

D mm	L_2 mm	Shank mm	Part-No.
Overall length 57,5 mm			
3	27	10 x 24	30566-6-03027-L
3	27	10 x 24	30566-6-03027-R
4	22	10 x 25	30566-5-04027-L
4	22	10 x 25	30566-5-04027-R
5	22	10 x 25	30566-5-05027-L
5	22	10 x 25	30566-5-05027-R
5,1	25	10 x 25	30566-5-05127-L
5,1	25	10 x 25	30566-5-05127-R
6	22	10 x 25	30566-5-06027-L
6	22	10 x 25	30566-5-06027-R
7	22	10 x 25	30566-5-07027-L
7	22	10 x 25	30566-5-07027-R
8	22	10 x 25	30566-5-08027-L
8	22	10 x 25	30566-5-08027-R
Overall length 70 mm			
3	27	10 x 33	30566-6-03070-L
3	27	10 x 33	30566-6-03070-R
3,5	30	10 x 33	30566-6-03570-R
4	27	10 x 30	30566-5-04035-L
4	27	10 x 30	30566-5-04035-R
4,5	35	10 x 25	30566-5-04535-L
4,5	35	10 x 25	30566-5-04535-R
5	35	10 x 25	30566-5-05035-L
5	35	10 x 25	30566-5-05035-R
5,5	35	10 x 25	30566-5-05535-L
5,5	35	10 x 25	30566-5-05535-R
6	35	10 x 25	30566-5-06035-L
6	35	10 x 25	30566-5-06035-R
6,5	35	10 x 25	30566-5-06535-L
6,5	35	10 x 25	30566-5-06535-R
7	35	10 x 25	30566-5-07035-L
7	35	10 x 25	30566-5-07035-R
7,5	35	10 x 25	30566-5-07535-R
8	35	10 x 25	30566-5-08035-L
8	35	10 x 25	30566-5-08035-R
8,5	35	10 x 25	30566-5-08535-L
8,5	35	10 x 25	30566-5-08535-R
9	35	10 x 25	30566-5-09035-R
9,5	35	10 x 25	30566-5-09535-R
10	35	10 x 25	30566-5-10035-L
10	35	10 x 25	30566-5-10035-R
11	35	10 x 25	30566-5-11035-L
11	35	10 x 25	30566-5-11035-R
12	35	10 x 25	30566-5-12035-L
12	35	10 x 25	30566-5-12035-R

Technical details
60°V-point of solid TC. Ø 3 and 3,5 mm with solid TC spiral portion and 120° V-point. Parallel shank with clamping flat and length adjusting screw. Spiral portion Teflon-coated up from Ø 4 mm.

Application
For use in adaptor chucks, etc. on dowel hole drilling machines and CNC machines. To drill through holes in solid wood and panel materials, also in laminated design.
Ø 3 and 3,5 mm solid TC can also be used to drill blind-holes.

* For use in Leitz quick-change adaptors PM 320-0-55 to 58, a special length adjusting screw has to be mounted. Shank and clamping flat diameter of the drills are specially designed for these adaptors. Drills will be delivered complete with mounted special length adjusting screw, if simply ordered as an additional part (see "Accessories").

Spare parts / Accessories		Part-No.
Length adjusting screw	M 5 x 8	39075-0-05080-R
Length adjusting screw	M 5 x 17, special design*	39075-0-05017-R

Drills

Through hole Drills TCT

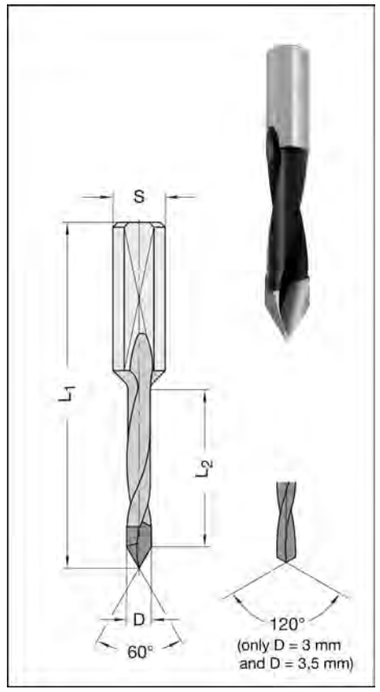

30566 parallel shank 10 x 25 mm

D mm	L_2 mm	Shank mm	Part-No.
Overall length 77 mm			
5	40	10 x 25	30566-5-05045-L
5	40	10 x 25	30566-5-05045-R
6	40	10 x 25	30566-5-06045-L
6	40	10 x 25	30566-5-06045-R
6,5	40	10 x 25	30566-5-06545-R
7	40	10 x 25	30566-5-07045-L
7	40	10 x 25	30566-5-07045-R
8	40	10 x 25	30566-5-08045-L
8	40	10 x 25	30566-5-08045-R
8,5	40	10 x 25	30566-5-08545-R
9	40	10 x 25	30566-5-09045-L
9	40	10 x 25	30566-5-09045-R
10	40	10 x 25	30566-5-10045-L
10	40	10 x 25	30566-5-10045-R
11	40	10 x 25	30566-5-11045-L
11	40	10 x 25	30566-5-11045-R
12	40	10 x 25	30566-5-12045-L
12	40	10 x 25	30566-5-12045-R

Spare parts / Accessories		Part-No.
Length adjusting screw	M 5 x 8	39075-0-05080-R
Length adjusting screw	M 5 x 17, special design*	39075-0-05017-R

* For use in Leitz quick-change adaptors PM 320-0-55 to 58, a special length adjusting screw has to be mounted. Shank and clamping diameter of the drills are specially designed for these adaptors. Drills will be delivered complete with mounted special length adjusting screw, if simply ordered as an additional part (see "Accessories").

Technical details
60°V-point of solid TC. Parallel shank with clamping flat and length adjusting screw. Spiral portion Teflon-coated.

Application
For use in adaptor chucks, etc. on dowel hole drilling machines and CNC machines. To drill through holes in solid wood and panel materials, also in laminated design.

Dowel Drills TCT

specially ground

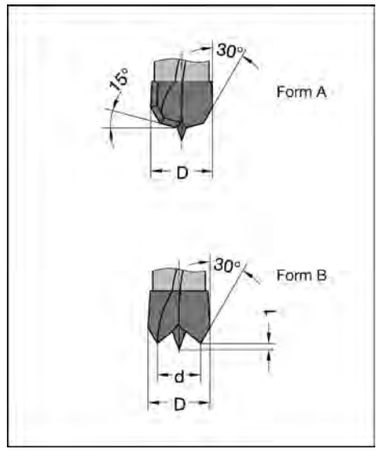

Type A

Technical details:
ZDF-design = centre point and main cutting edges with double bevel.

Application:
Designed to drill smooth, clean-cut holes with no bottom break out. The ZDF-design is especially suited for when drills with spurs are to be reground for drilling through-holes.

Type B

Technical details:
Head with short centre point design. Improved centering is ensured, as cutting starts from the cutting edges (d).

Application:
For materials containing mineral components, e.g. Corian, MDF and abrasive particle boards. Reduced heat production when working thermoplastics through short centre point design. No surface tear-outs or bottom break-outs.

It is possible to subsequently grind all TCT drills of types 30510 / 30530 / 30540 / 30145 to both of these designs. (Also possible for twist drills types 30140-5 and 30150-5). Reduced diameter due this modification of $0{,}1^{-0{,}1}$ mm.
Prices see page 7.30

Through hole Drills TCT

with landed flute

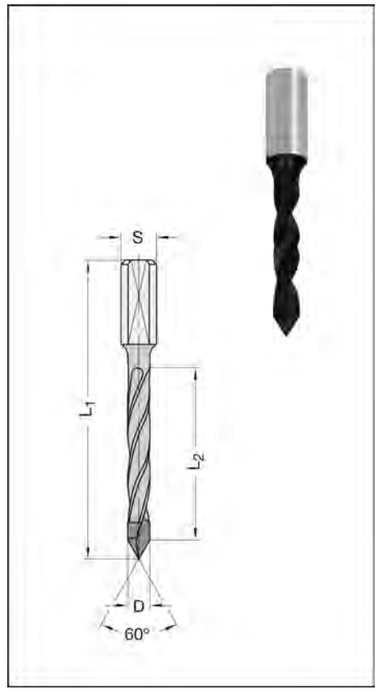

30560 parallel shank 8 mm

D mm	L_2 mm	Shank mm	Part-No.
Overall length 55,5 mm			
5	25	8 x 20	30560-5-05030-L
5	25	8 x 20	30560-5-05030-R
Overall length 67 mm			
5	35	8 x 20	30560-5-05040-L
5	35	8 x 20	30560-5-05040-R
8	35	8 x 20	30560-5-08040-L
8	35	8 x 20	30560-5-08040-R

Technical details
60° V-point of solid TC. Parallel shank with clamping flat and length adjusting screw.
Spiral portion with landed flute, Teflon-coated.

Application
For drilling through-holes in various kinds of wood composites and boards on automatic dowel hole boring machines and CNC machines.

The landed flute (heel) provides
- improved centering on return stroke
- permits infinitely variable mounting of the countersink directly on the spiral portion of the drill

Through hole Drills TCT

with landed flute

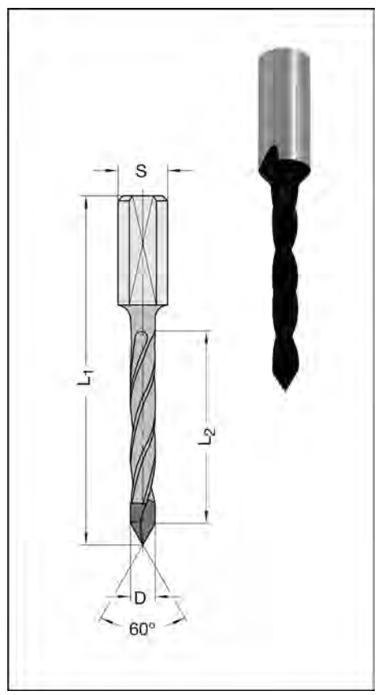

30567 parallel shank 10 mm

D mm	L_2 mm	Shank mm	Part-No.
Overall length 57,5 mm			
5	25	10 x 20	30567-5-05025-L
5	25	10 x 20	30567-5-05025-R
Overall length 70 mm			
5	35	10 x 20	30567-5-05035-L
5	35	10 x 20	30567-5-05035-R
8	35	10 x 20	30567-5-08035-L
8	35	10 x 20	30567-5-08035-R

Technical details
60° V-point of solid TC. Parallel shank with clamping flat and length adjusting screw.
Spiral portion with landed flute, Teflon-coated.

Application
For drilling through-holes in various kinds of wood composites and boards on automatic dowel hole boring machines and CNC machines.

The landed flute (heel) provides
- improved centering on return stroke
- permits infinitely variable mounting of the countersink directly on the spiral portion of the drill

Spare parts / Accessories		Part-No.
Length adjusting screw	M 5 x 8	39075-0-05080-R
Length adjusting screw	M 5 x 17, special design*	39075-0-05017-R

* Description see page 2.21

Through hole Drills solid TC

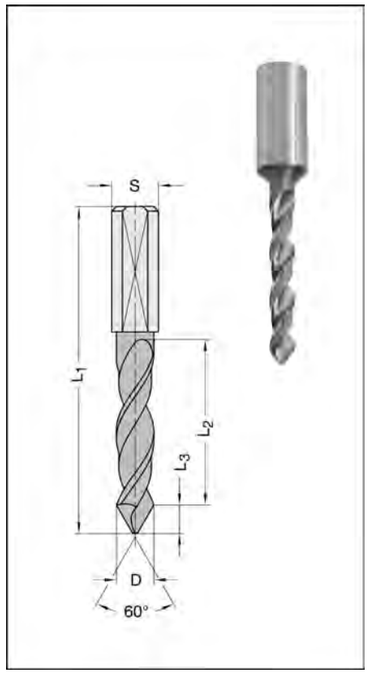

30568 parallel shank 10 mm

D mm	L_2 mm	L_3 mm	Shank mm	Part-No.
Overall length 57,5 mm				
8	22	6,2	10 x 27	30568-6-08022-L
8	22	6,2	10 x 27	30568-6-08022-R
Overall length 70 mm				
4	35	2,7	10 x 27	30568-6-04035-L
4	35	2,7	10 x 27	30568-6-04035-R
8	35	6,2	10 x 27	30568-6-08035-R
10	33	7,8	10 x 27	30568-6-10033-R

Technical details
Solid TC spiral portion, with V-point 60°. Parallel shank with clamping flat and length adjusting screw.

Application
For drilling through-holes in solid wood and all common panel materials on automatic dowel holes drilling machines and CNC-machines.
Especially recommended for drilling GFK, CFK, HPL (e.g. Trespa) and all common kinds of wood composites.

Application data:
R.P.M. = 6 000 - 9 000
v_f = 0,5 - 4 m/min
Reduce P.P.M. and feed rate for difficult ranges of materials
(R.P.M. = 3 000 - 4 000 and v_f = 0,5 - 1 m/min).

- Little vibration stress through rigid solid TC design
- No break-outs when retracting the drill through non-stepped parallel spiral portion
- Finest ground spiral portion for improved chip flow
- considerably increased regrinding area

Through hole Drill solid TC

Clamex

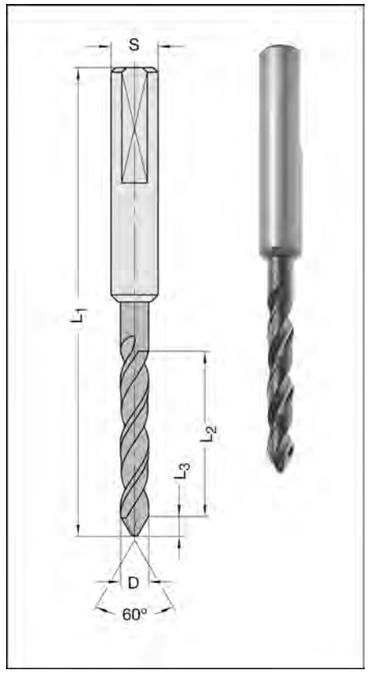

30569 parallel shank 10 mm

D mm	L_2 mm	L_3 mm	Shank mm	Part-No.
Overall length 100 mm				
6	35	4,3	10 x 50	30569-6-06035-R

Technical details
Solid TC spiral portion, with V-point 60°. Extended parallel shank with clamping flat and adjusting screw.
Right-hand rotation.

Application
For drilling precise through-holes in solid wood and all common panel materials boards on CNC-machines when using the Clamex P® - connectors.

Spare parts / Accessories		Part-No.
Length adjusting screw	M 5 x 8	39075-0-05080-R

Drills

Through hole Drills solid TC

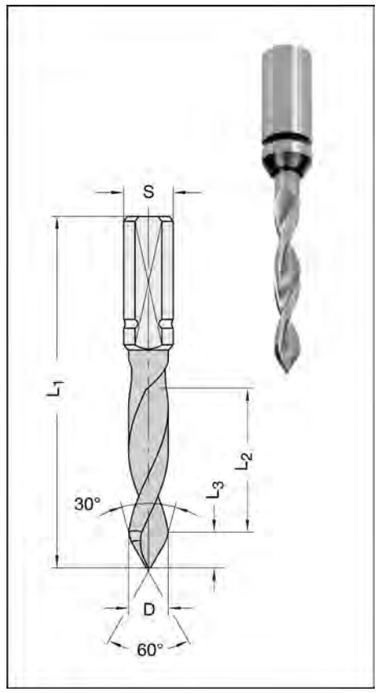

30573-6 cylindrical shank 10 mm

D mm	L_2 mm	L_3 mm	Shank mm	Part-No.
Overal length 57,5 mm				
3	18	2,6	10 x 28	30573-6-03018-L
3	18	2,6	10 x 28	30573-6-03018-R
4	20	3,5	10 x 24	30573-6-04020-L
4	20	3,5	10 x 24	30573-6-04020-R
5	20	4,3	10 x 24	30573-6-05020-L
5	20	4,3	10 x 24	30573-6-05020-R
6	20	5,2	10 x 24	30573-6-06020-L
6	20	5,2	10 x 24	30573-6-06020-R
8	20	6,9	10 x 25	30573-6-08020-L
8	20	6,9	10 x 25	30573-6-08020-R
10	20	8,7	10 x 25	30573-6-10020-L
10	20	8,7	10 x 25	30573-6-10020-R
Overal length 70 mm				
3	20	2,6	10 x 35	30573-6-03020-L
3	20	2,6	10 x 35	30573-6-03020-R
4	25	3,5	10 x 32	30573-6-04025-L
4	25	3,5	10 x 32	30573-6-04025-R
5	33	4,3	10 x 24	30573-6-05033-L
5	33	4,3	10 x 24	30573-6-05033-R
6	33	5,2	10 x 24	30573-6-06033-L
6	33	5,2	10 x 24	30573-6-06033-R
8	33	6,9	10 x 25	30573-6-08033-L
8	33	6,9	10 x 25	30573-6-08033-R
10	33	8,7	10 x 25	30573-6-10033-L
10	33	8,7	10 x 25	30573-6-10033-R

Technical details
Solid TC spiral portion with V-point and double bevel. Parallel shank with clamping flat and length adjusting screw.

Application
For drilling through-holes in different kinds of wood composites and boards on automatic dowel hole drilling machines and CNC-machines.
Especially recommended for drilling HPL, Multiplex, laminated chipborad and MDF as well as solid wood.

- Little vibration stress through rigid solid TC design
- No break-outs when retracting the drill through non-stepped parallel spiral portion
- Finest ground spiral portion for improved chip flow
- considerably increased regrinding area

Spare parts / Accessories		Part-No.
Length adjusting screw	M 5 x 8	39075-0-05080-R
Length adjusting screw	M 5 x 17, special design*	39075-0-05017-R

* For use in Leitz quick-change adaptors PM 320-0-55 to 58, a special length adjusting screw has to be mounted. Shank and clamping diameter of the drills are specially designed for these adaptors. Drills will be delivered complete with mounted special length adjusting screw, if simply ordered as an additional part (see "Accessories").

ISODUR Through hole Drills TCT

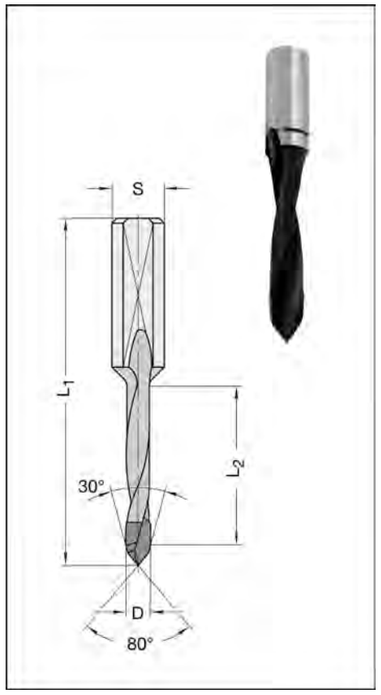

30570 parallel shank 10 mm

D mm	L_2 mm	Shank mm	Part-No.
Overall length 57,5 mm			
5	27	10 x 25	30570-5-05027-L
5	27	10 x 25	30570-5-05027-R
Overall length 70 mm			
4	35	10 x 25	30570-5-04035-L
4	35	10 x 25	30570-5-04035-R
5	35	10 x 25	30570-5-05035-L
5	35	10 x 25	30570-5-05035-R
6	35	10 x 25	30570-5-06035-L
6	35	10 x 25	30570-5-06035-R
7	35	10 x 25	30570-5-07035-L
7	35	10 x 25	30570-5-07035-R
8	35	10 x 25	30570-5-08035-L
8	35	10 x 25	30570-5-08035-R
10	35	10 x 25	30570-5-10035-L
10	35	10 x 25	30570-5-10035-R
Overall length 77 mm			
5	45	10 x 25	30570-5-05045-L
5	45	10 x 25	30570-5-05045-R

Technical details
Solid special grade TC head, with V-point and double bevel. Spiral portion Teflon-coated for reduced friction and better chip flow. Parallel shank with clamping flat and length adjusting screw.

Application
For drilling through-holes in different kinds of wood composites and boards on dowel hole drilling machines and CNC machines.

- Considerably increased tool life compared with traditional TCT dowel drills
- Set-up times can be enormously reduced for only small extra costs

Spare parts / Accessories		Part-No.
Length adjusting screw	M 5 x 8	39075-0-05080-R
Length adjusting screw	M 5 x 17, special design*	39075-0-05017-R

* For use in Leitz quick-change adaptors PM 320-0-55 to 58, a special length adjusting screw has to be mounted. Shank and clamping flat diameter of the drills are specially designed for these adaptors. Drills will be delivered complete with mounted special length adjusting screw, if simply ordered as an additional part (see "Accessories").

Dowel Drills TCT

with threaded shank

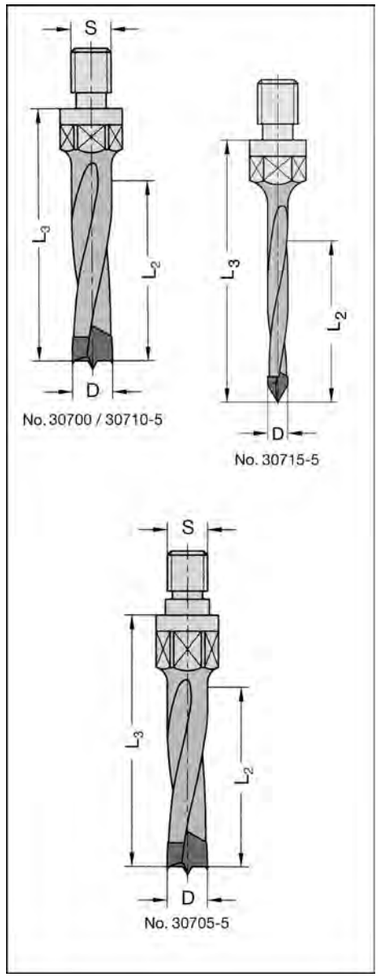

30700-5 external thread M 8

D mm	L_2 mm	L_3 mm	Part-No.
Drilling depth 45 mm			
5	45	63	30700-5-05045-L
5	45	63	30700-5-05045-R
6	45	63	30700-5-06045-L
6	45	63	30700-5-06045-R
8	45	63	30700-5-08045-L
8	45	63	30700-5-08045-R

30705-5 external thread M 8 - with register 9 x 4 mm

D mm	L_2 mm	L_3 mm	Part-No.
Drilling depth 40 mm			
8	40	55	30705-5-08040-L
8	40	55	30705-5-08040-R
Drilling depth 60 mm			
8	60	75	30705-5-08060-L
8	60	75	30705-5-08060-R

30710-5 external thread M 10

D mm	L_2 mm	L_3 mm	Part-No.
Drilling depth 45 mm			
5	45	63	30710-5-05045-L
5	45	63	30710-5-05045-R
6	45	63	30710-5-06045-L
6	45	63	30710-5-06045-R
8	45	63	30710-5-08045-L
8	45	63	30710-5-08045-R
10	45	63	30710-5-10045-L
10	45	63	30710-5-10045-R
Drilling depth 60 mm			
8	60	80	30710-5-08060-L
8	60	80	30710-5-08060-R
10	60	80	30710-5-10060-L
10	60	80	30710-5-10060-R
12	60	80	30710-5-12060-L
12	60	80	30710-5-12060-R

30715-5 external thread M 10 - V-point 60°

D mm	L_2 mm	L_3 mm	Part-No.
5	40	65	30715-5-05040-L
5	40	65	30715-5-05040-R

Technical details No. 30700/30705/30710
Solid TC head with centre point, two cutting edges and **negatively ground spurs. Increased back relief angle.** Spiral portion Teflon-coated. (No. 30700/30710).

Technical details No. 30715
60° V-point of solid TC. Spiral portion Teflon-coated.

Application
For drilling accurate blind-holes and through-holes (No. 30715) in various kinds of wood composites and boards.

Dowel Drills TCT

with threaded shank

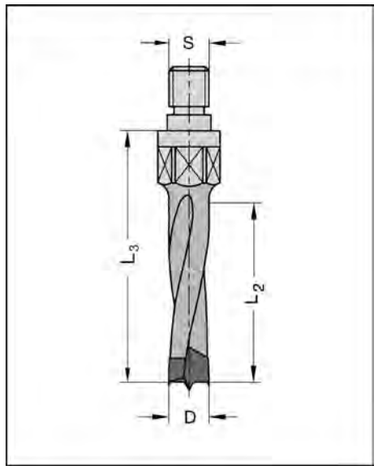

30730-5 external thread M 10 - with register 11 x 4 mm

D mm	L_2 mm	L_3 mm	Part-No.
5	45	63	30730-5-05045-L
5	45	63	30730-5-05045-R
6	45	63	30730-5-06045-R
8	45	63	30730-5-08045-L
8	45	63	30730-5-08045-R
10	45	63	30730-5-10045-L
10	45	63	30730-5-10045-R

Technical details
Solid TC head with centre point, two cutting edges. **Negatively ground spurs and increased back relief angle.** Spiral portion Teflon-coated.

Application
For drilling accurate blind-holes in solid wood and wood composite boards.

Negatively ground spurs for accurate holes and longer tool life

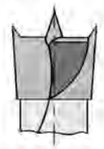

Increased back relief angle for reduced feed force and improved chip removal

Dowel Drills TCT

internal thread M 10

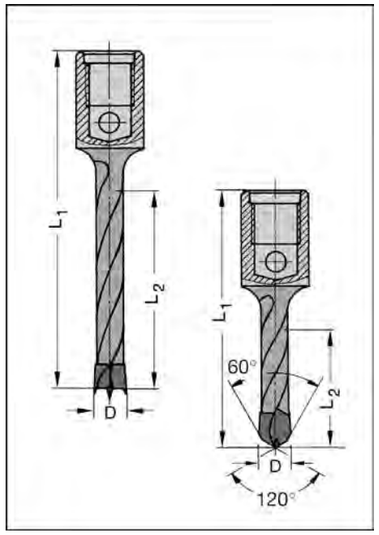

26180-5 centre point and spurs

D mm	L_2 mm	L_1 mm	Part-No.
5	47	80	26180-5-05047-L
5	47	80	26180-5-05047-R
6	47	80	26180-5-06047-R
8	47	80	26180-5-08047-L
8	47	80	26180-5-08047-R
10	47	80	26180-5-10047-R

26190-5 V-point

D mm	L_2 mm	L_1 mm	Part-No.
5	28	61	26190-5-05028-L
5	28	61	26190-5-05028-R

Technical details No. 26180-5
Solid TC head with two cutting edges, with centre point and **negatively ground spurs. Increased back relief angle.** Spiral portion Teflon-coated.

Technical details No. 26190-5
Solid TC head with V-point and double bevel. Spiral portion Teflon-coated.

Application
For drilling accurate blind-holes (No. 26180) and through-holes (No. 26190) in wood composites and boards.

Dowel Drills TCT

for Mafell

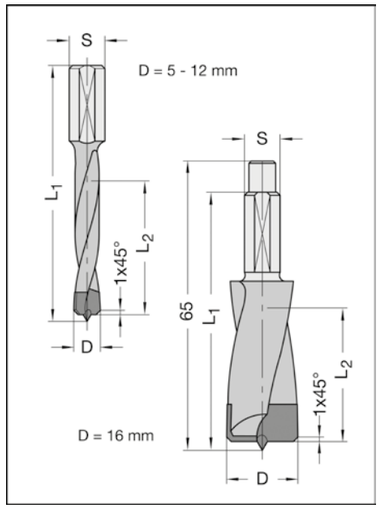

30515

D mm	L_2 mm	L_1 mm	Shank mm	Part-No.
5	30	57,5	8 x 17	30515-5-05030-R
6	30	57,5	8 x 17	30515-5-06030-R
8	30	57,5	8 x 17	30515-5-08030-R
10	30	58	8 x 18	30515-5-10030-R
12	30	58	8 x 18	30515-5-12030-R
16*	30	58/65	8 x 18	30515-5-16030-R

* Only on DD40P

Technical details

Centre point and two cutting edges with side bevel. **Cutting geometry designed for high spindle speeds.** Spiral part Teflon-coated. Parallel shank with clamping flat and length adjusting screw. Right-hand rotation.

Application

For drilling of blind-holes in solid wood, various wood composites and boards etc. on MAFELL-Duo dowel machines DD40G, DDF40 and DD40P, as well as on portable routers.

Hinge Boring Bits TCT Z2

interchangeable shank design

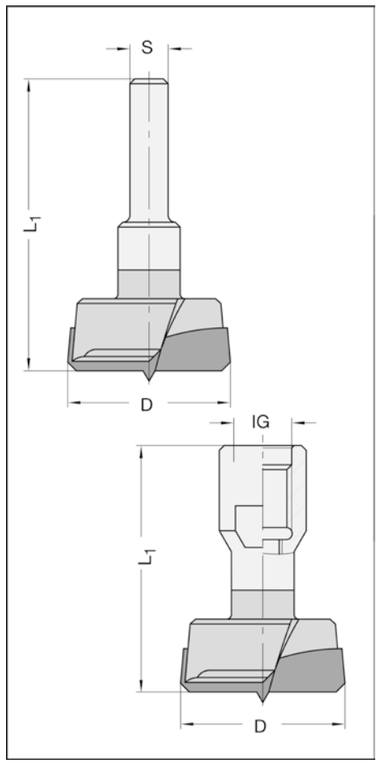

30190

D mm	L_1 mm	Shank mm	Part-No.
35	60	8	30193-5-35000-R
35	60	12	30196-5-35000-R
Internal thread			
35	50	M 10	30197-5-35000-R
35	50	M 12 x 1	30198-5-35000-R

Technical details

Two raker teeth, centre point, with ground side bevel.
Cutting angle geometry designed for speed up to 25 000 R.P.M.
IG = shank with internal thread - complete with key flat. Right-hand rotation.

Application

For drilling of accurate holes for hinges on portable routers.

Hinge Boring Bits TCT Z2+V2

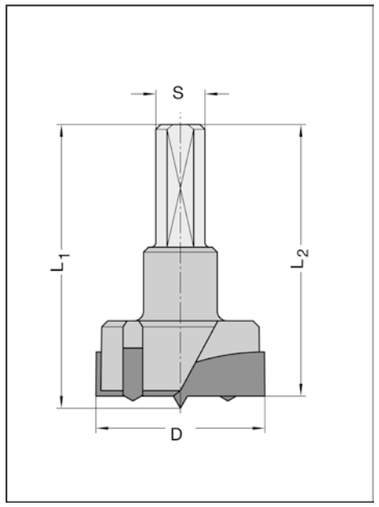

30300 parallel shank 10 mm

D mm	L_2 mm	Shank mm	Part-No.
Overall length 57,5 mm			
15	56,5	10 x 26	30300-5-15057-L
15	56,5	10 x 26	30300-5-15057-R
18	56,5	10 x 26	30300-5-18057-L
18	56,5	10 x 26	30300-5-18057-R
20	56,5	10 x 26	30300-5-20057-L
20	56,5	10 x 26	30300-5-20057-R
22	56,5	10 x 26	30300-5-22057-R
25	56,5	10 x 26	30300-5-25057-L
25	56,5	10 x 26	30300-5-25057-R
26	56,5	10 x 26	30300-5-26057-L
26	56,5	10 x 26	30300-5-26057-R
30	56,5	10 x 26	30300-5-30057-L
30	56,5	10 x 26	30300-5-30057-R
34	56,5	10 x 26	30300-5-34057-R
35	56,5	10 x 26	30300-5-35057-L
35	56,5	10 x 26	30300-5-35057-R
40	56,5	10 x 26	30300-5-40057-R
Overall length 70 mm			
15	69	10 x 26	30300-5-15070-L
15	69	10 x 26	30300-5-15070-R
18	69	10 x 26	30300-5-18070-L
18	69	10 x 26	30300-5-18070-R
20	69	10 x 26	30300-5-20070-L
20	69	10 x 26	30300-5-20070-R
24	69	10 x 26	30300-5-24070-R
25	69	10 x 26	30300-5-25070-L
25	69	10 x 26	30300-5-25070-R
30	69	10 x 26	30300-5-30070-L
30	69	10 x 26	30300-5-30070-R
34	69	10 x 26	30300-5-34070-R
35	69	10 x 26	30300-5-35070-L
35	69	10 x 26	30300-5-35070-R
Overall length 77 mm			
35	75	10 x 26	30300-5-35077-R

Technical details

Two TCT cutting edges, two inserted spurs and centre point. Parallel shank with clamping flat and length adjusting screw.

Application

For drilling accurate and clean cut blind-holes in hardwood, various kinds of wood composites and boards etc. (for furniture fittings etc.) on fitting drilling machines, automatic dowel holes drilling machines and CNC-machines.

Special Forms for through-hole drilling see page 2.31

On demand, it is possible to reduce or to remove on all dimensions of this page the centre point.
Additional cost see "modification costs" page 7.30

Spare parts / Accessories		Part-No.
Length adjusting screw	M 5 x 8	39075-0-05080-R
Length adjusting screw	M 5 x 17, special design*	39075-0-05017-R

* Description see page 2.21

Drills

ISODUR Hinge Boring Bits TCT Z2+V2

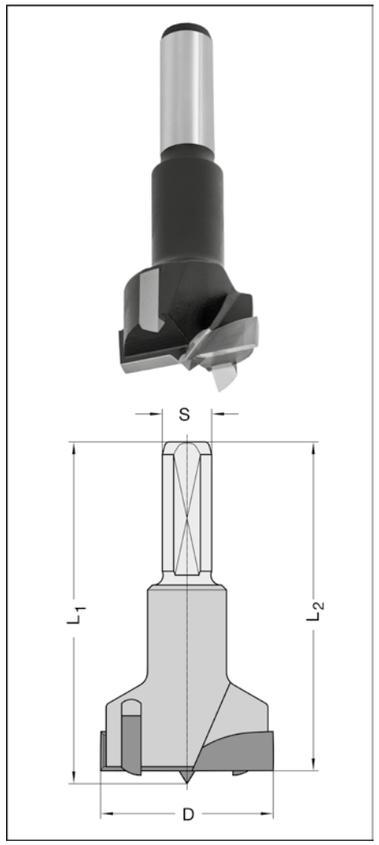

30360 parallel shank 10 mm

D mm	L_2 mm	L_1 mm	Shank mm	Part-No.
15	68	70	10 x 26	30360-5-15070-L
15	68	70	10 x 26	30360-5-15070-R
20	68	70	10 x 26	30360-5-20070-L
20	68	70	10 x 26	30360-5-20070-R
25	68	70	10 x 26	30360-5-25070-L
25	68	70	10 x 26	30360-5-25070-R
30	68	70	10 x 26	30360-5-30070-L
30	68	70	10 x 26	30360-5-30070-R
35	68	70	10 x 26	30360-5-35070-L
35	68	70	10 x 26	30360-5-35070-R

Technical details
Two TCT raker teeth and two TCT ISODUR spurs with special ground spur geometry in wear-resistance micro grain quality (HW 07), with centre point (2 mm). Parallel shank with clamping flat and length adjusting screw.

Application
For drilling accurate and clean cut blind holes and edge blind holes in hardwood, various kinds of wood composites, boards, etc. (e.g. for furniture fittings) on CNC-machining centres, drilling- and hinge boring machines.

Reducing the centre point - e.g. for blind-holes for hinges close to the lower surface-layer - possible on request (JSO part-no. 39835-5-00001-0).

- ISODUR spur geometry in special HW 07 TC grade for longer tool life
- Especially suitable for edge blind holes

Spare parts / Accessories		Part-No.
Length adjusting screw	M 5 x 8	39075-0-05080-R
Length adjusting screw	M 5 x 17, special design*	39075-0-05017-R

* Description see page 2.21

Hinge Boring Bits TCT Z3+V3

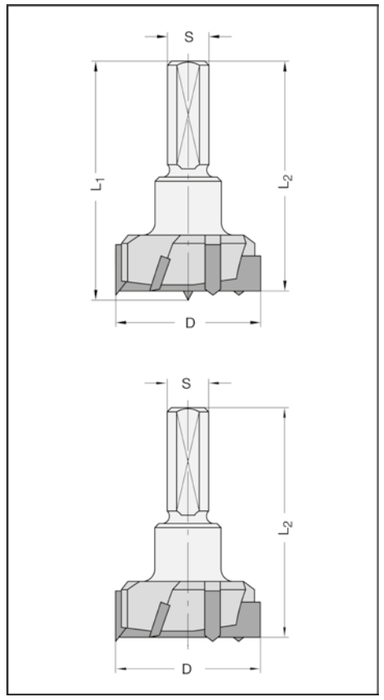

30320 / 30330 parallel shank 10 mm

D mm	L_2 mm	L_1 mm	Shank mm	Part-No.
With centre point				
35	55,5	57,5	10 x 26	30320-5-35000-L
35	55,5	57,5	10 x 26	30320-5-35000-R
Without centre point				
26	55,5	-	10 x 26	30330-5-26000-R
35	55,5	-	10 x 26	30330-5-35000-R

Technical details
No. 30320 with three cutting edges, three inserted spurs and centre point.
No. 30330 with three cutting edges, three inserted spurs, without centre point.
Both with parallel shank and length adjusting screw.

Application
For drilling accurate and clean cut blind-holes in hardwood, various kinds of wood composites and boards etc. (for furniture fittings etc.), on hinge boring machines, drilling machines or on CNC machines.

Spare parts / Accessories		Part-No.
Length adjusting screw	M 5 x 8	39075-0-05080-R
Length adjusting screw	M 5 x 17, special design*	39075-0-05017-R

* Description on page 2.21

Hinge Boring Bits TCT Z2+V2

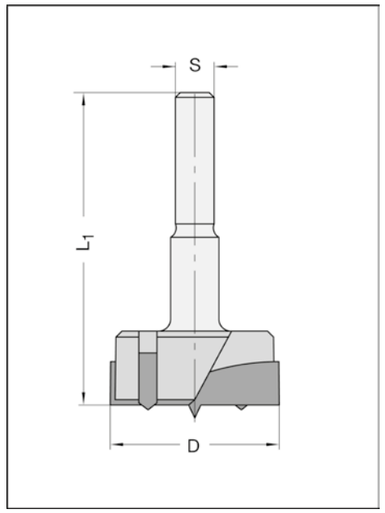

30103 parallel shank 8 mm

D mm	L_1 mm	Shank mm	Part-No.
25	65	8 x 30	30103-5-02500-R
30	65	8 x 30	30103-5-03000-R
35	65	8 x 30	30103-5-03500-R

Technical details
Two raker teeth, centre point and two inserted spurs. Right-hand rotation.

Application
For drilling of accurate holes for hinges in hardwood and various kinds of wood composites on portable routers.
For hard, brittle synthetic coating we recommend No. 30190 (page 2.24).

Hinge Boring Bit Sets TCT Z2+V2

for double-head hinges

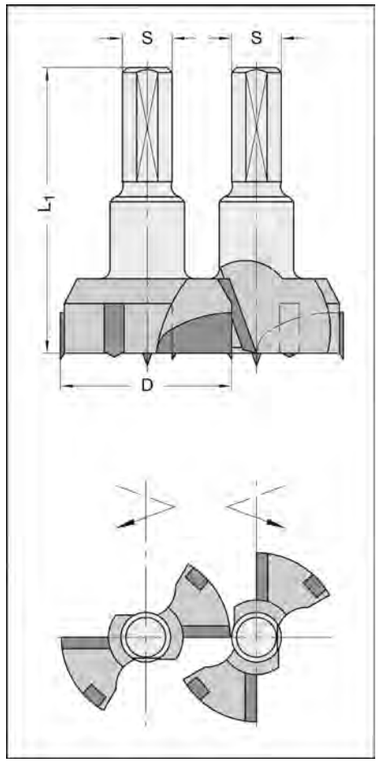

30305 parallel shank 10 mm

D mm	L_1 mm	Type	Rotation	Shank mm	Part-No.
Boring bit sets					
30	57,5	A	rh./lh	10 x 26	30305-5-30000-0
30	57,5	B	rh./lh.	10 x 26	30305-5-30001-0
34	57,5	A	rh./lh	10 x 26	30305-5-34000-0
34	57,5	B	rh./lh	10 x 26	30305-5-34001-0
Single drills					
30	57,5	A	right	10 x 26	30305-5-30000-R
30	57,5	A	left	10 x 26	30305-5-30000-L
30	57,5	B	right	10 x 26	30305-5-30001-R
30	57,5	B	left	10 x 26	30305-5-30001-L
34	57,5	A	right	10 x 26	30305-5-34000-R
34	57,5	A	left	10 x 26	30305-5-34000-L
34	57,5	B	right	10 x 26	30305-5-34001-R
34	57,5	B	left	10 x 26	30305-5-34001-L

Technical details
Set consisting of one each left-hand and right-hand TCT hinge boring bit. Two cutting edges, two inserted spurs and centre point. Parallel shank with clamping flat and length adjusting screw.

Application
For drilling precise, blind-holes for double-head hinges (e.g. GU-JET-T-SOLO), as well as for corner fittings and scissor fittings in wooden windows on the following corner fitting drilling machines.

Type A: for Striffler, Ganner, Götzinger, Hess, Schafberger a. Sprödhuber, etc. machines
Type B: for Weinig-Unirex, Weinig-Conturex, Koch machines

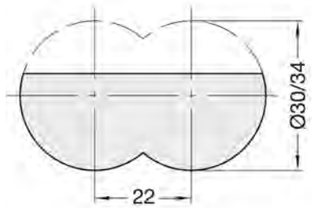

CABINEO Hinge Boring Bit Sets TCT Z2+V2

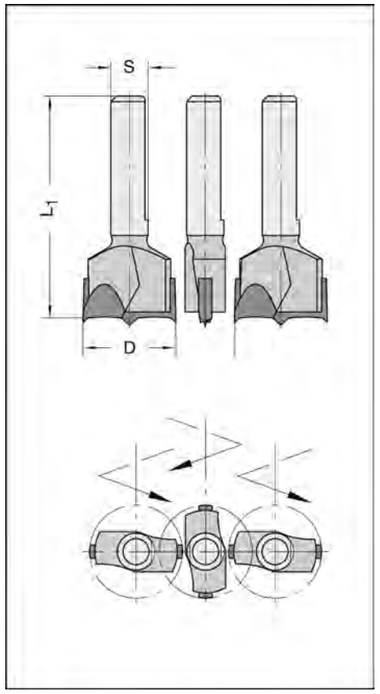

30360-5

D mm	L_1 mm	Type	Rotation	Shank mm	Part-No.
Boring bit sets					
15	37	B	rh./lh	6/5,5 x 22,5	30360-5-15370-0
15	37	A	rh./lh	6/5,5 x 22,5	30360-5-15371-0
Single bits					
15	37	A/B	left	6/5,5 x 22,5	30360-5-15370-L
15	37	B	right	6/5,5 x 22,5	30360-5-15370-R
15	37	A	right	6/5,5 x 22,5	30360-5-15371-R

Technical details
Set constisting of two left-hand and one right-hand TCT hinge boring bit. Two TCT raker teeth with ground spurs and ground centre peak.

Application
For drilling precise and time saving Cabineo® triple hinge holes with boring aggregates on CNC-machines.

Type A: for Atemag boring aggregates
Type B: for Benz boring aggregates

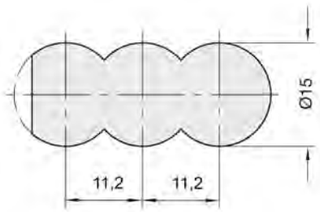

Hinge Boring Bits TCT Z2+V2

with threaded shank

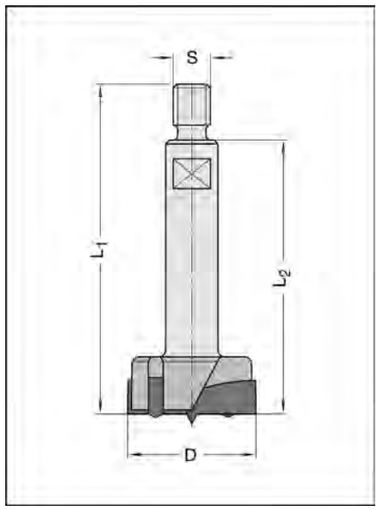

30390 external thread M 10

D mm	L_2 mm	L_1 mm	Part-No.
20	63	78	30390-5-20000-R
25	63	78	30390-5-25000-R

Technical details
Two TCT cutting edges, two inserted spurs and centre point.

Application
For drilling accurate and clean cut blind-holes in solid wood and panel materials, etc. (for furniture fittings etc.).

Hinge Boring Bits w. reversible TC tips Z2+V2

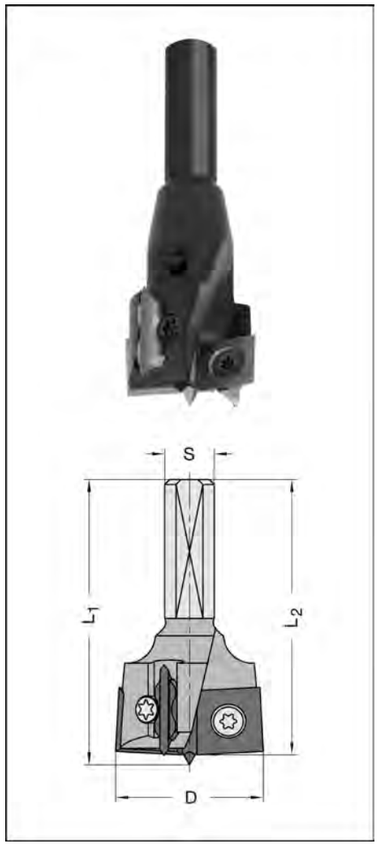

22605 parallel shank 10 mm

D mm	L_2 mm	Shank mm	Part-No.
Overall length 57,5 mm			
25	55,5	10 x 30	22605-5-25575-R
30	55,5	10 x 30	22605-5-30575-R
35	55,5	10 x 30	22605-5-35575-R
Overall length 70 mm			
25	68	10 x 30	22605-5-25700-R
30	68	10 x 30	22605-5-30700-R
35	68	10 x 30	22605-5-35700-L
35	68	10 x 30	22605-5-35700-R

Technical details
Two reversible TC raker tips and two reversible spurs. Adjustable centre point for drilling depths close to lower surface layer if necessary. Raker tips fixed with counter sunk screws for perfect chip removal. Shank with clamping flat and length adjusting screw.

Application
For drilling accurate and clean cut blind-holes in all common board materials, soft- and hardwood (e.g. for furniture fittings).

Spare parts / Accessories		Part-No.
Raker tip*	for 22605, 10,9 x 10,9 x 1,5 mm, HW 01, for D = 25 mm	72021-6-01090-0
Raker tip*	for 22605, 13,4 x 13,4 x 1,5 mm, HW 01, for D = 30 mm	72021-6-01340-0
Raker tip*	for 22605, 15,9 x 15,9 x 1,5 mm, HW 01, for D = 35 mm	72021-6-01590-0
Torx countersunk srew	for 22605, M 3,5 x 5,2 mm, T9, for raker tip	39084-0-03552-R
Allen srew	for 22605, M 5 x 5, for centre point	39021-0-05050-R
Torx key	for 22605, T9, with flag	39077-0-03009-1
Torx key	for 22605, T15, with flag	39077-0-04015-1
Reversible spur	for 22605/22600, HW 04	39180-6-00000-0
Centre point	for 22605/22600, solid TC	39181-6-00000-0
Torx countersunk screw	for 22605/22600, M 3,5 x 5,5 mm, T15, for spurs	39084-0-03555-R
Raker tip	for 22600, 10,5 mm for Ø 25 mm	72050-6-25000-0
Raker tip	for 22600, 11 mm for Ø 26 mm	72050-6-26000-0
Raker tip	for 22600, 13 mm for Ø 30 mm	72050-6-30000-0
Raker tip	for 22600, 15,7 mm for Ø 35 mm	72050-6-35000-0
Torx clamping screw	for 22600, M 3,5 x 4, T15, for raker tip	39081-0-03540-R
Torx clamping screw	for 22600, M 3,5 x 6,5, T15, for raker tip	39081-0-03565-R
Allen srew	for 22600, M 6 x 6, for centre point	39021-0-06060-R
Allen key	for 22600, SW 3, for centre point	39120-0-03000-0
Raker tip	for 22610, 10,8 x 5,5 x 1,1 mm, f. D=25mm	72055-6-25000-0
Raker tip	for 22610, 11,3 x 5,5 x 1,1 mm, f. D=26mm	72055-6-26000-0
Raker tip	for 22610, 13,3 x 5,5 x 1,1 mm, f. D=30mm	72055-6-30000-0
Raker tip	for 22610, 15,3 x 5,5 x 1,1 mm, f. D=34mm	72055-6-34000-0
Raker tip	for 22610, 15,8 x 5,5 x 1,1 mm, f. D=35mm	72055-6-35000-0
Raker tip	for 22610, 18,3 x 5,5 x 1,1 mm, f. D=40mm	72055-6-40000-0
Reversible spur	for 22610, TC, left-hand rotation	39180-6-00001-L
Reversible spur	for 22610, TC, right-hand rotation	39180-6-00001-R
Centre point	for 22610, solid TC	39181-6-00001-0
Retaining ring	for 22610	39110-0-00001-0
Torx clamping screw	for 22610, M 3 x 7,0, T 8, for centre point	39080-0-30701-R
Torx clamping screw	for 22610, M 3/M 4, T 8, for retaining ring	39115-0-00001-0
Torx countersunk srew	for 22610, M 3 x 7,5, T 10, for spur	39084-0-03061-R
Torx key	for 22610, T 8, with flag	39077-0-03008-1
Length adjusting screw	for 22605/22600/22610, M 5 x 8	39075-0-05080-R

* With extra chip breaking grooves for reduced feed force available on request.

- Without disturbing clamping screws in the chip space and therefore barrier free chip flow
- Ouick and easy unimpeded tip change

Cylinder Boring Bits TCT Z2+V2

short design

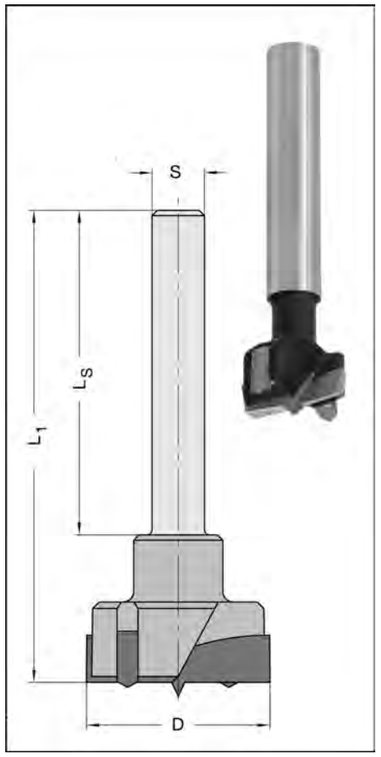

30100-5 parallel shank 10 mm

D mm	L_1 mm	L_S mm	Part-No.
10	90	62	30100-5-01000-R
12	90	62	30100-5-01200-R
13	90	62	30100-5-01300-R
14	90	62	30100-5-01400-R
15	90	62	30100-5-01500-R
16	90	62	30100-5-01600-R
17	90	62	30100-5-01700-R
18	90	62	30100-5-01800-R
19	90	62	30100-5-01900-R
20	90	62	30100-5-02000-R
21	90	62	30100-5-02100-R
22	90	62	30100-5-02200-R
23	90	62	30100-5-02300-R
24	90	74	30100-5-02400-R
25	90	74	30100-5-02500-R
26	90	74	30100-5-02600-R
27	90	74	30100-5-02700-R
28	90	74	30100-5-02800-R
30	90	74	30100-5-03000-R
32	90	74	30100-5-03200-R
34	90	74	30100-5-03400-R
35	90	74	30100-5-03500-R
36	90	30	30100-5-03600-R
40	90	30	30100-5-04000-R
42	90	30	30100-5-04200-R
45	90	30	30100-5-04500-R
47	90	30	30100-5-04700-R
48	90	30	30100-5-04800-R
50	90	30	30100-5-05000-R

Technical details
Two cutting edges and centre point. Up to Ø 13 mm with ground spurs on raker teeth.
Up from Ø 14 mm with two inserted spurs. Parallel shank. Right-hand rotation.

Application
For drilling accurate holes in solid wood and panel materials.

For accurate holes in hard, brittle coatings, spurs will be removed and raker teeth ground to bevel 45°. At extra costs.

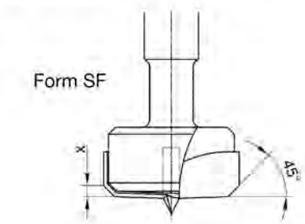

For through–holes, all T.C. tipped hinge boring bits up to D = 50 mm can be modified to double bevelled design as shown in sketch below. At extra costs.

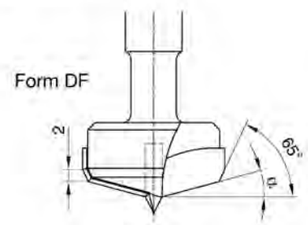

Cylinder Boring Bits TCT Z2+V2

long design

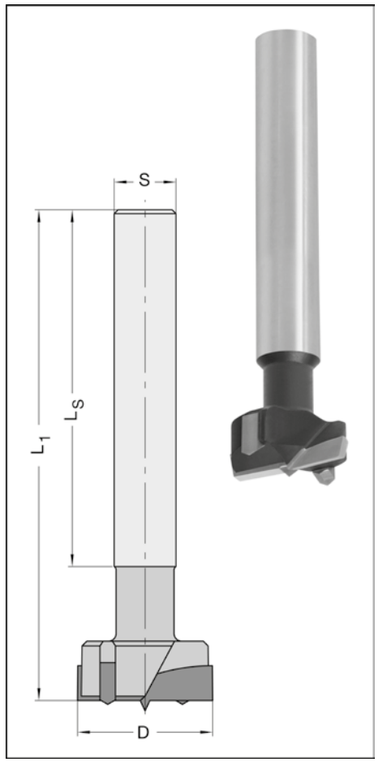

30110-5

D mm	L_1 mm	L_S mm	Shank mm	Part-No.
20	140	105	13	30110-5-02000-R
22	140	105	13	30110-5-02200-R
24	140	105	13	30110-5-02400-R
25	140	103	13	30110-5-02500-R
28	140	103	13	30110-5-02800-R
30	140	103	13	30110-5-03000-R
35	140	103	16	30110-5-03500-R
40	140	103	16	30110-5-04000-R
45	140	120	16	30110-5-04500-R
48	140	120	16	30110-5-04800-R
50	140	118	16	30110-5-05000-R

Special peak design for through-holes on page 2.31

Technical details
Two cutting edges, two inserted spurs, centre point. Parallel shank. Right-hand rotation.

Application
For drilling accurate holes in solid wood and panel materials.

Twist Drills HS

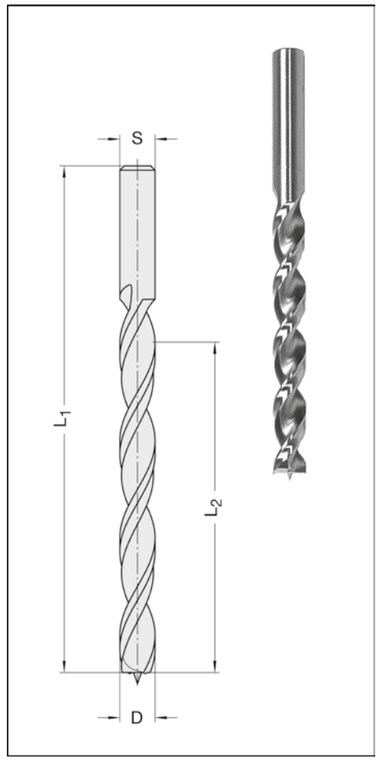

30130 / 30132 common shank and drilling diameter

D mm	L_2 mm	L_1 mm	Part-No.
2	22	49	30130-4-02000-L
2	22	49	30130-4-02000-R
2,5	25	57	30130-4-02500-L
2,5	25	57	30130-4-02500-R
3	33	60	30130-4-03000-L
3	33	60	30130-4-03000-R
3,5	39	70	30130-4-03500-L
3,5	39	70	30130-4-03500-R
4	43	75	30130-4-04000-L
4	43	75	30130-4-04000-R
4,5	47	80	30130-4-04500-L
4,5	47	80	30130-4-04500-R
5	52	85	30130-4-05000-L
5	52	85	30130-4-05000-R
5,5	57	92	30130-4-05500-R
6	57	92	30130-4-06000-L
6	57	92	30130-4-06000-R
6,5	63	100	30130-4-06500-R
7	69	108	30130-4-07000-R
7,5	69	108	30130-4-07500-R
8	75	115	30130-4-08000-L
8	75	115	30130-4-08000-R
8,5	75	115	30130-4-08500-R
9	80	125	30130-4-09000-R
10	87	130	30130-4-10000-R
Extra length			
4	100	150	30132-4-04000-R
5	100	150	30132-4-05000-R
6	100	150	30132-4-06000-R
8	100	150	30132-4-08000-R
10	100	150	30132-4-10000-R

Technical details
With centre point and spurs. Particularly large flutes for better chip removal. TIN-coated.

Application
For drilling accurate blind-holes in solid wood.

Solid tungsten carbide design see No. 30155-6 (page 2.36).

Twist Drills TCT

with landed flute

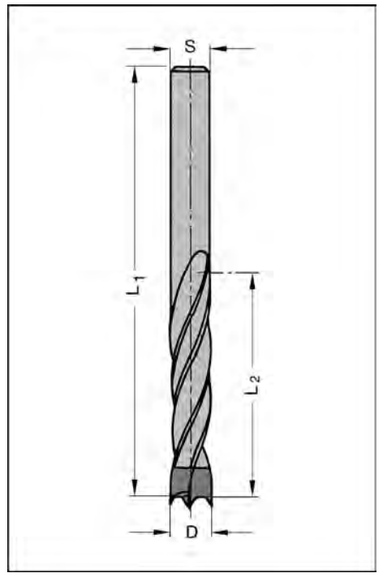

30140-5 common shank and drilling diameter

D mm	L_2 mm	L_1 mm	Part-No.
5	35	70	30140-5-05035-L
5	35	70	30140-5-05035-R
6	35	70	30140-5-06035-R
8	35	70	30140-5-08035-R
10	35	70	30140-5-10035-L
10	35	70	30140-5-10035-R
Extra length			
4	55	80	30140-5-04055-R
4,5	60	85	30140-5-04560-R
5	60	90	30140-5-05060-R
5,5	65	100	30140-5-05565-R
6	65	100	30140-5-06065-R
6,5	70	110	30140-5-06570-R
7	70	110	30140-5-07070-R
8	75	120	30140-5-08075-R
8,5	80	130	30140-5-08580-R
9	80	130	30140-5-09080-R
10	90	140	30140-5-10090-R
11	95	150	30140-5-11095-R
12	100	155	30140-5-12100-R

For ø below 5 mm see also No. 30130 / 30132-4 (page 2.33).

Technical details

Solid TC head with centre point, two cutting edges and **negatively ground spurs. Increased back relief angle**. Spiral portion Teflon coated.

- the landes flute (heel) provides improved centering on return stroke
- permits infinitely mounting of countersinks directly on the spiral portion of the drill

Application

Due to the landed flute, especially recommended for drilling precise blind-holes. For solid wood and boards.

Negatively ground spurs for accurate holes and longer tool life

Increased back relief angle for reduced feed force and improved chip removal

Twist Drills TCT

with landed flute

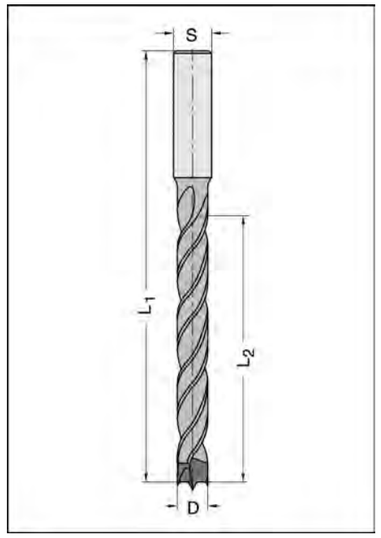

30150-5 parallel shank 13/16 x 50 mm

D mm	L_2 mm	L_1 mm	Shank mm	Part-No.
6	75	140	13 x 50	30150-5-06000-R
8	85	150	13 x 50	30150-5-08000-R
10	95	160	13 x 50	30150-5-10000-R
12	105	170	13 x 50	30150-5-12000-R
13	110	175	13 x 50	30150-5-13000-R
14	115	180	13 x 50	30150-5-14000-R
15	120	185	13 x 50	30150-5-15000-R
16	125	190	16 x 50	30150-5-16000-R
18	130	200	16 x 50	30150-5-18000-R
20	140	210	16 x 50	30150-5-20000-R

Technical details

Solid TC head with centre point, two cutting edges and **negatively ground spurs. Inceased back relief angle.** Spiral portion Teflon-coated.

- the landed flute (heel) provides improved centering on return stroke
- permits infinitely mounting of countersinks directly on the spiral portion of the drill

Application

Due to the landed flute, especially recommended for drilling precise blind-holes. For solid wood and boards.

Negatively ground spurs for accurate holes and longer tool life

Increased back relief angle for reduced feed force and improved chip removal

Twist Drills HS

with landed flute

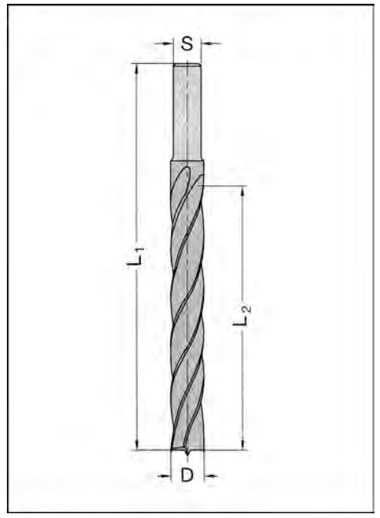

30155-4 parallel shank 10 x 30 mm

D mm	L_2 mm	L_1 mm	Shank mm	Part-No.
11	100	140	10 x 30	30155-4-11000-R
12	100	140	10 x 30	30155-4-12000-R
13	100	140	10 x 30	30155-4-13000-R
14	100	140	10 x 30	30155-4-14000-R
15	100	140	10 x 30	30155-4-15000-R
16	100	140	10 x 30	30155-4-16000-R
18	100	140	10 x 30	30155-4-18000-R
20	100	140	10 x 30	30155-4-20000-R

Technical details

Two raker edges, two ground spurs, centre point.

Application

Due to the landed flute, especially recommended for drilling precise blind-holes. For all kind of wood.

- the landes flute (heel) provides improved centering on return stroke

Twist Drills solid TC

with landed flute

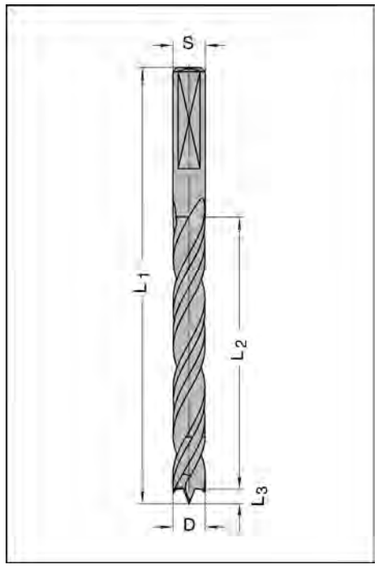

30155-6 parallel shank 10 x 25 mm

D mm	L_2 mm	L_3 mm	L_1 mm	Shank mm	Part-No.
without clamping flat					
8	70	3,5	113	10 x 25	30155-6-08071-L
8	70	3,5	113	10 x 25	30155-6-08071-R
8	90	3,5	133	10 x 25	30155-6-08091-L
8	90	3,5	133	10 x 25	30155-6-08091-R
10	70	3,5	113	10 x 25	30155-6-10071-L
10	70	3,5	113	10 x 25	30155-6-10071-R
10	90	3,5	133	10 x 25	30155-6-10091-L
10	90	3,5	133	10 x 25	30155-6-10091-R
with clamping flat					
8	70	3,5	113	10 x 25	30155-6-08070-L
8	70	3,5	113	10 x 25	30155-6-08070-R
8	90	3,5	133	10 x 25	30155-6-08090-L
8	90	3,5	133	10 x 25	30155-6-08090-R
10	70	3,5	113	10 x 25	30155-6-10070-L
10	70	3,5	113	10 x 25	30155-6-10070-R
10	90	3,5	133	10 x 25	30155-6-10090-L
10	90	3,5	133	10 x 25	30155-6-10090-R

Technical details
Solid TC, two raker edges, two spurs, extra long centre point. Polished flutes for perfect chip removal, **with JSO-XD-coating for improved life time.**

Application
For drilling very deep and exceptionally accurate holes without emptying between. Especially applicable to drilling connection- and dowel holes in frame- and window production. Also perfect for drilling holes in oblique work-pieces. For solid wood.

Application data:
R.P.M = 4 500 - 6 000
v_f = 2 - 3 m/min

Stockade Drills HS

with landed flute

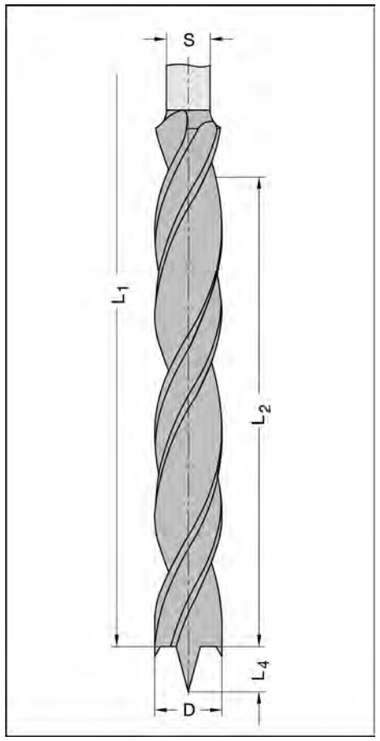

30175-4

D mm	L_2 mm	L_4 mm	L_1 mm	Shank mm	Part-No.
12	105	10,0	170	13 x 50	30175-4-12000-R
14	115	12,5	180	13 x 50	30175-4-14000-R
16	125	13,0	190	13 x 50	30175-4-16000-R
18	130	16,0	200	13 x 50	30175-4-18000-R
20	140	16,5	210	13 x 50	30175-4-20000-R
22	150	16,5	220	13 x 50	30175-4-22000-R
24	160	18,0	235	13 x 50	30175-4-24000-R
25	170	18,5	250	13 x 50	30175-4-25000-R

Technical details
Two raker teeth, two ground spurs and **extra long centre point.** Spiral portion with landed flute.
Right-hand rotation.

Application
For drilling holes in oblique work-pieces, e.g. holes for stockades in stair production.
To be used with jigs or drilling attachments for stockade holes.

Drills

Countersink solid TC Z3

interchangeable shank design

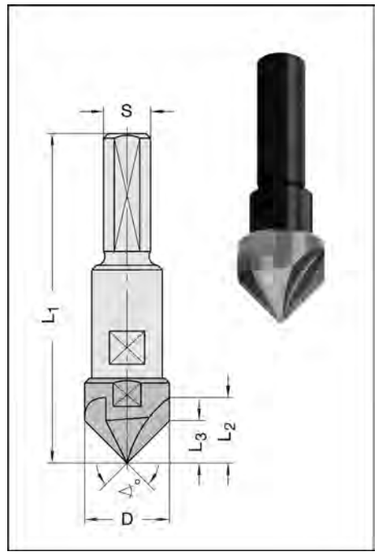

34540-6 new - parallel shank 10 mm

D mm	L_2 mm	L_3 mm	Angle	L_1 mm	Shank mm	Part-No.
18	14,5	9	90°	55,5	10	34540-6-18001-L
18	14,5	9	90°	55,5	10	34540-6-18001-R
18	14,5	9	90°	70	10	34540-6-18002-L
18	14,5	9	90°	70	10	34540-6-18002-R

Technical details
Solid TC head with three cutting edges. Radial relief ground.
Shank with clamping flat and length adjusting screw. Right-hand rotation, for mechanical feed.

Application
For 90° bevelling of pilot drilled holes. For use on CNC machine centres in the drilling unit.
Not applicable for milling operations.
For milling operations in all common board- and plastic materials, we recommend No. 24540-6 (page 1.12).

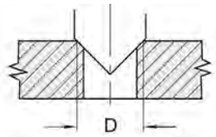

Loose Countersink TCT Z2

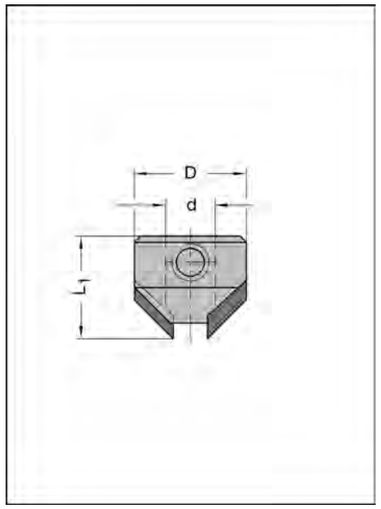

30650-5

d mm	D mm	L_1 mm	Part-No.
3	14	15	30650-5-03000-R
4	14	15	30650-5-04000-L
4	14	15	30650-5-04000-R
5	16	15	30650-5-05000-L
5	16	15	30650-5-05000-R
6	16	15	30650-5-06000-L
6	16	15	30650-5-06000-R
7	18	15	30650-5-07000-L
7	18	15	30650-5-07000-R
8	18	15	30650-5-08000-L
8	18	15	30650-5-08000-R
9	20	15	30650-5-09000-R
10	20	15	30650-5-10000-L
10	20	15	30650-5-10000-R
12	22	15	30650-5-12000-R

Technical details
Two TCT cutting edges, countersink angle 90°.

Application
To use with twist drills and dowel drills with landed flute
No. 30510 (page 2.15), No. 30530 (page 2.12), No. 30150 (page 2.35), No. 30140 (page 2.34),
or / and No. 30145-5 (page 2.13).
To be clamped directly onto the spiral portion of the drill. For all kinds of wood composites and boards.

Spare parts / Accessories		Part-No.
Allen screw	M 6 x 4 ISO 4029	39070-0-06040-R

Countersink TCT Z2

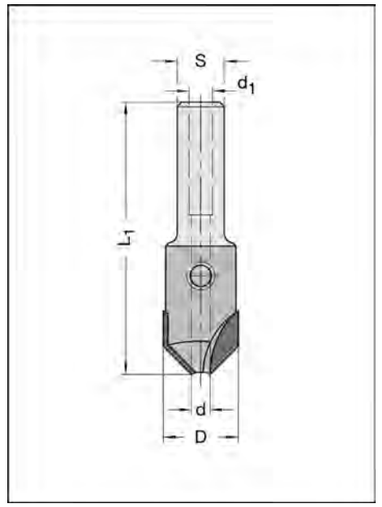

30755-5 parallel shank 10 mm

d mm	d_1 mm	D mm	L_1 mm	Shank mm	Part-No.
3	4,5	16	60	10 x 30	30755-5-03000-L
3	4,5	16	60	10 x 30	30755-5-03000-R
3,5	4,5	16	60	10 x 30	30755-5-03500-R
4	4,5	16	60	10 x 30	30755-5-04000-L
4	4,5	16	60	10 x 30	30755-5-04000-R
4,5	5,0	16	60	10 x 30	30755-5-04500-L
4,5	5,0	16	60	10 x 30	30755-5-04500-R
5	5,5	16	60	10 x 30	30755-5-05000-L
5	5,5	16	60	10 x 30	30755-5-05000-R
5,5	6,0	16	60	10 x 30	30755-5-05500-R
6	6,5	16	60	10 x 30	30755-5-06000-L
6	6,5	16	60	10 x 30	30755-5-06000-R

Technical details
Two TCT cutting edges. Countersink angle 90°.
On bores (d) up to 4,0 mm it might be possible to put subsequently a thread M5.

Application
To use with parallel shank twist drills No. 30130 (page 2.33), No. 30140 (page 2.34) and No. 30120 (page 2.5).

Spare parts / Accessories		Part-No.
Allen screw	M 6 x 6 ISO 4029	39070-0-06060-R

Loose Countersink TCT Z2

for shank clamping

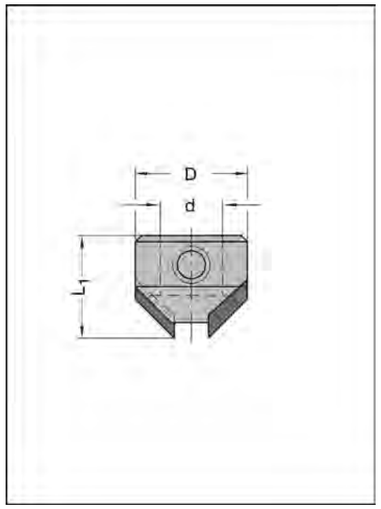

30660

d mm	D mm	L_1 mm	For drills diameter	Part-No.
10	15,5	16,5	5 - 10	30660-5-15500-L
10	15,5	16,5	5 - 10	30660-5-15500-R
10	20	17,5	5 - 10	30660-5-20001-L
10	20	17,5	5 - 10	30660-5-20001-R

Technical details
Two TCT cutting edges, countersink angle 90°.

Application
To be clamped onto the extended shank of drills No. 30540-5 (page 2.10 and 2.11). For all kinds of wood composites and boards.

Spare parts / Accessories		Part-No.
Allen screw	M 6 x 4 ISO 4029 (for D = 15,5/20 mm)	39070-0-06040-R
Allen screw	M 6 x 5 ISO 4029 (for D = 22 mm)	39070-0-06050-R0

Drills

Loose Countersink HS Z2+V2

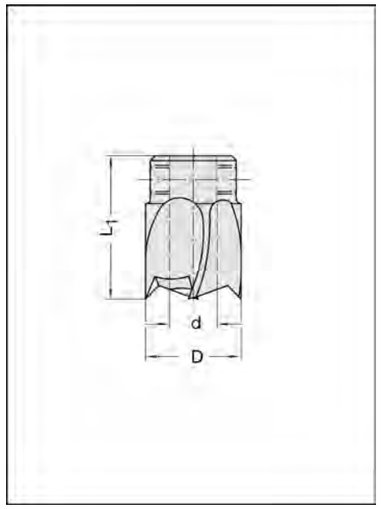

30160

d mm	D mm	L_1 mm	Part-No.
5	12	25	30160-4-05012-R
5	15	25	30160-4-05015-R
6	15	25	30160-4-06015-R
8	16	25	30160-4-08016-R
8	20	30	30160-4-08020-R
8	25	30	30160-4-08025-R
10	20	30	30160-4-10020-R
10	25	30	30160-4-10025-R
10	30	30	30160-4-10030-R
12	25	25	30160-4-12025-R
12	30	30	30160-4-12030-R
14	40	30	30160-4-14040-R

Technical details
Two raker teeth and two spurs. Right-hand rotation.

Application
To use with twist drills with landed flute. For all kinds of wood composites.

Spare parts / Accessories		Part-No.
Allen screw	M 5 x 4 ISO 4029 (up to d = 6 mm)	39070-0-05040-R
Allen screw	M 6 x 5 ISO 4029 (up from d = 8 mm)	39070-0-06050-R

Copying Cutters HS (HSS-E) Z1

for working aluminium or plastics

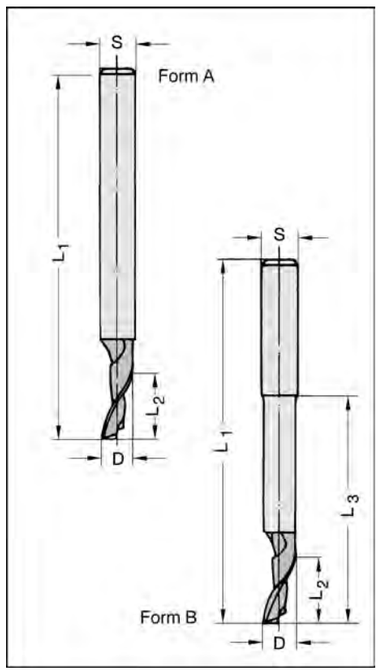

25213-4

D mm	L_2 mm	L_3 mm	L_1 mm	Shank mm	Part-No.
Form A					
3	12	-	60	8	25213-4-03012-R
4	12	-	60	8	25213-4-04012-R
8	14	-	80	8	25213-4-08014-R
8	14	-	120	8	25213-4-08120-R
10	14	-	80	8	25213-4-10014-R
12	14	-	80	8	25213-4-12014-R
Form B					
5	18	35	80	8	25213-4-05035-R
5	16	45	90	8	25213-4-05045-R
6	16	45	90	8	25213-4-06045-R
8	14	68	100	8	25213-4-08068-R

Technical details
One helical HS (HSS-E) cutting edge. Cutting on bottom and periphery.
Type B with narrow neck. Right-hand rotation.

Application
For grooving, slotting and aperture operations in aluminium and plastic materials. For use on copying machines, e.g. Elumatec, Haffner, Rotox, Striffler, Wegoma, etc.

Water Slot Cutters HS (HSS-E) Z1

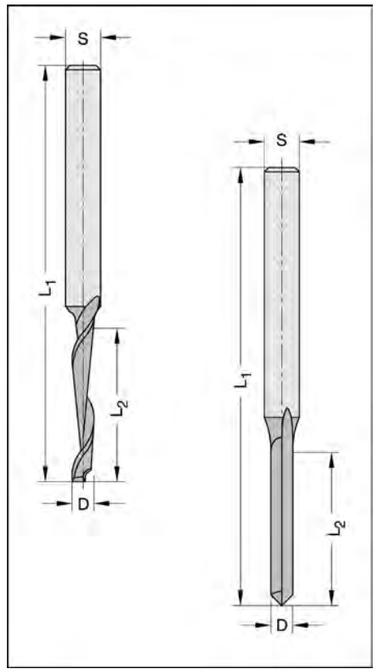

25217 helical design

D mm	L_2 mm	L_1 mm	Shank mm	Part-No.
5	35	80	8	25217-4-05035-R
5	40	100	8	25217-4-05040-R
6	40	100	8	25217-4-06040-R

25221 straight design

D mm	L_2 mm	L_1 mm	Shank mm	Part-No.
5	55	100	8	25221-4-05055-R

Technical details
No. 25217: helical design with one cutting edge.
No. 25221: with V-point.
Right-hand rotation.

Application
For use on copying and water slot machines, e.g. Elumatec, Haffner, Rotox, Striffler, Wegoma, etc.
No. 25221 especially recommendable for extrusions in plastics (PVC).

Counterbores HS

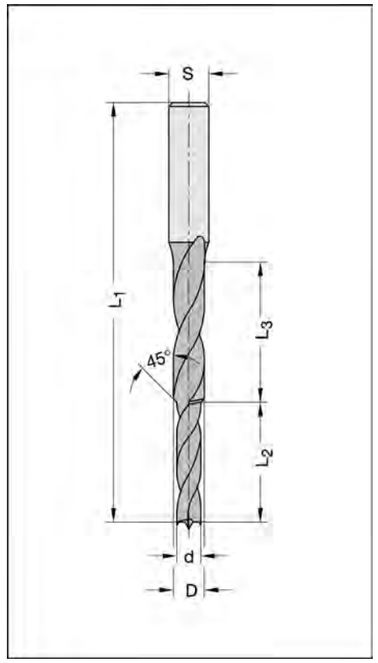

30185-4 for drill-in hinges

Hinge size	D mm	d mm	L_2 mm	L_3 mm	L_1 mm	Shank mm	Part-No.
13/15	6,8	6,0	15	50	105	10 x 30	30185-4-06801-R
14,5	7,2	6,3	24	40	105	10 x 30	30185-4-07201-R
16	7,7	6,7	30	35	105	10 x 30	30185-4-07701-R
18	8,7	7,7	30	35	105	10 x 30	30185-4-08701-R
20	9,8	8,8	30	35	105	10 x 30	30185-4-09801-R

Technical details
Front drill with centre point and spurs. Counter sunk 45°. Parallel shank without clamping flat. Right-hand rotation.

Application
For stepped drill holes in screw in spigot hinges e.g. Anuba, Simons etc.
For use with boring jigs and devises, as well as on CNC machines.

Solid TC design on request.

Drills

PCD Through hole Drills Z1

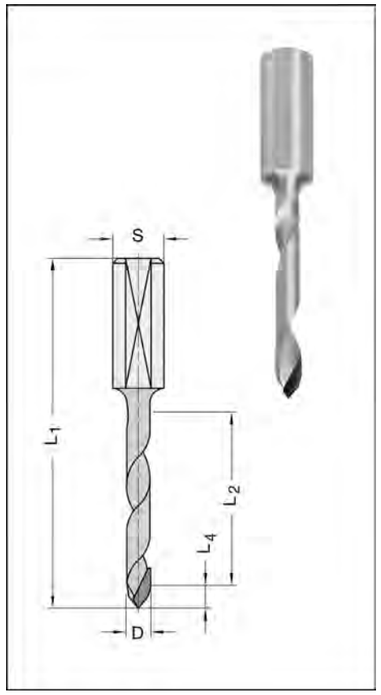

30565-9

D mm	L_2 mm	L_4 mm	Shank mm	Part-No.
Overall length 57,5 mm				
5	23	4,5	10 x 26	30565-9-05027-L
5	23	4,5	10 x 26	30565-9-05027-R
Overall length 70 mm				
4	30	3,0	10 x 26	30565-9-04030-L
4	30	3,0	10 x 26	30565-9-04030-R
5	35	4,5	10 x 26	30565-9-05035-L
5	35	4,5	10 x 26	30565-9-05035-R
6	35	5,5	10 x 26	30565-9-06035-L
6	35	5,5	10 x 26	30565-9-06035-R
8	35	6,5	10 x 26	30565-9-08035-L
8	35	6,5	10 x 26	30565-9-08035-R
10	35	7,5	10 x 26	30565-9-10035-L
10	35	7,5	10 x 26	30565-9-10035-R
12	35	8,5	10 x 26	30565-9-12035-L
12	35	8,5	10 x 26	30565-9-12035-R

Technical details
* pcd tipped drill body made of tool steel
* double bevelled peak design for tear-free through holes
* shank with clamping flat and length adjusting screw

Application
* for drillling through-holes in classical wood materials and extremely abrasive materials
  (HPL, gypsum plaster boards etc).
* for use on CNC machines and automatic dowel hole machines

Application data
R.P.M. = 4 500 - 9 000
v_f = 0,5 - 2 m/min

PCD Through hole Drills Z2

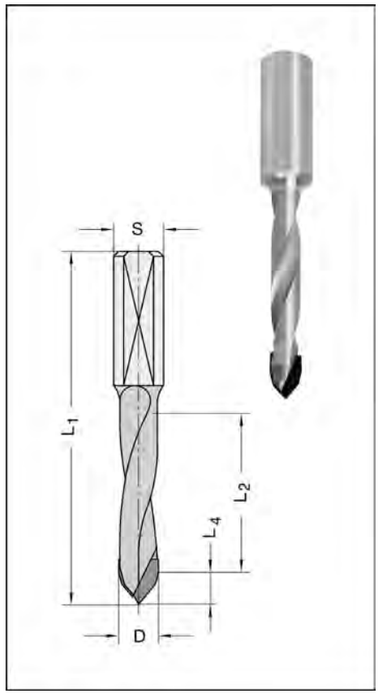

30566-9

D mm	L_2 mm	L_4 mm	Shank mm	Part-No.
Overall length 70 mm				
8	35	6,4	10 x 26	30566-9-08035-L
8	35	6,4	10 x 26	30566-9-08035-R
10	35	8,6	10 x 26	30566-9-10035-R
12	35	9,5	10 x 26	30566-9-12035-L
12	35	9,5	10 x 26	30566-9-12035-R

Technical details
* pcd tipped drill body made of tool steel
* double bevelled peak design for tear-free through holes
* shank with clamping flat and length adjusting screw

Application
* for drillling through-holes in classical wood materials and extremely abrasive materials
  (HPL, gypsum plaster boards etc).
* for use on CNC machines and automatic dowel hole machines
* recommended feed rate compare to No. 30565-9 up to 50 % higher

Application data
R.P.M. = 4 500 - 9 000
v_f = 0,8 - 3 m/min

PCD Dowel Drills Z2

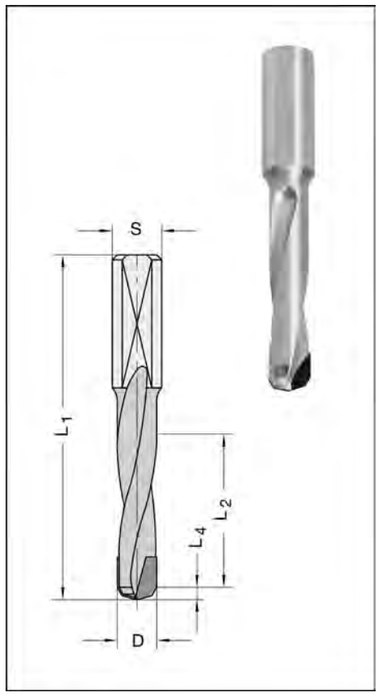

30540-9

D mm	L_2 mm	L_4 mm	Shank mm	Part-No.
Overall length 57,5 mm				
8	27	2,6	10 x 26	30540-9-08025-L
8	27	2,6	10 x 26	30540-9-08025-R
Overall length 70 mm				
8	35	2,6	10 x 30	30540-9-08035-L
8	35	2,6	10 x 30	30540-9-08035-R
10	35	3,2	10 x 30	30540-9-10035-L
10	35	3,2	10 x 30	30540-9-10035-R
12	35	3,9	10 x 30	30540-9-12035-L
12	35	3,9	10 x 30	30540-9-12035-R

Technical details
* pcd tipped drill body made of tool steel
* flat double bevel geometry for tear-free through holes
* shank with clamping flat and length adjusting screw

Application
* for drilling blind holes in classical wood materials and extremely abrasive materials
  (HPL, gypsum plaster boards etc.)
* for through holes in HPL, GFK and CFK
* for use on CNC machines and automatic dowel hole machines.

Drills

PCD Hinge Boring Bits Z2+2

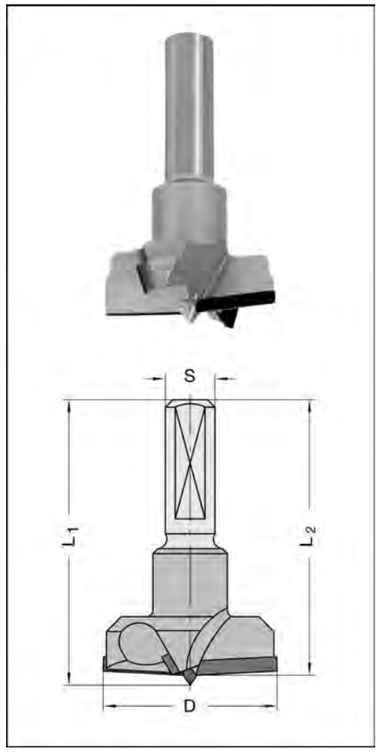

30300-9

D mm	L_2 mm	Shank mm	Part-No.
Overall length 57,5 mm			
25	55,5	10 x 26	30300-9-25057-R
35	55,5	10 x 26	30300-9-35057-R
Overall length 70 mm			
15	68	10 x 26	30300-9-15070-L
15	68	10 x 26	30300-9-15070-R
20	68	10 x 26	30300-9-20070-L
20	68	10 x 26	30300-9-20070-R
30	68	10 x 26	30300-9-30070-L
30	68	10 x 26	30300-9-30070-R
35	68	10 x 26	30300-9-35070-L
35	68	10 x 26	30300-9-35070-R

Further dimensions on inquiry.

Technical details
* pcd tipped drill body made of tool steel
* two raker cutting edges, two specially designed PCD spurs and TC centre point
* shank with clamping flat and adjusting screw

Application
* for drilling of accurate blind-holes in classical wood materials and extremely abrasive materials (HPL, gypsum plaster boards etc.)
* for use on CNC machines and automatic dowel hole boring machines

Counterbores

special production

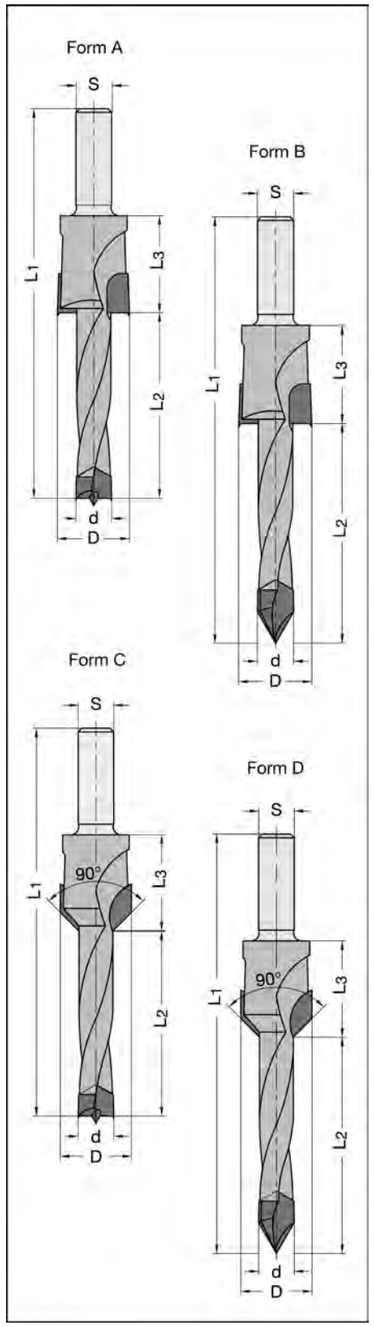

30170 / 30180

Technical details Form A, B (30170)
Large diameter drill with spurs. Front drill with centre point and spurs (= form A) or V-point (= form B).

D= 15 - 35 mm (HS and TCT)
L_1= 70 - 165 mm (HS and TCT)

Technical details Form C, D (30180)
Large diameter drill with 90° countersink, front drill either with centre point and spurs (= form C) or V-point (= form D).

D= 15 - 35 mm (HS), resp. D= 15 - 25 mm (TCT)
L_1 = 70 - 165 mm (HS), resp. L_1 = 70 - 120 mm(TCT)

HS: With landed flute.
TCT: Spiral portion Teflon coated, without landed flute.

Specifications required for orders:
Form, quantity, rotation and all other dimensions stated in the illustrations.
Also available with threaded shank (please mention design).

Minimum quantity of order: Two pieces both of same dimension and rotation.
Prices on request.

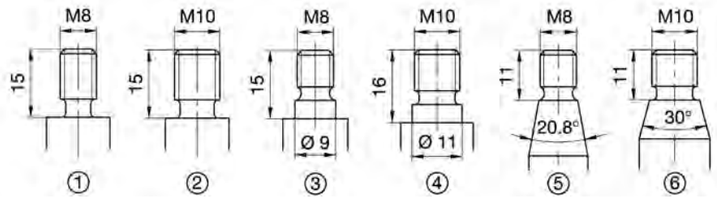

Profile Cutters solid TC Z2

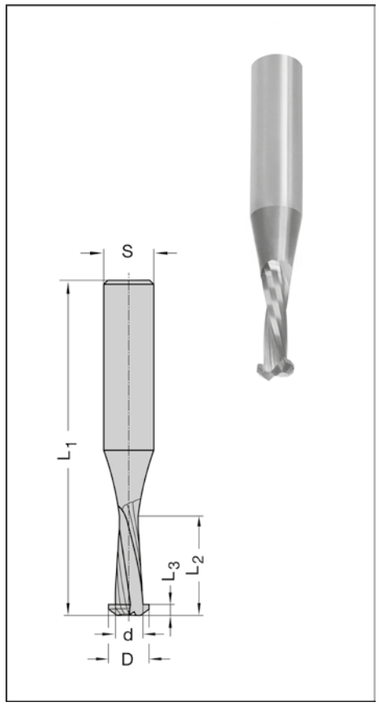

20535-6

D mm	d mm	L_2 mm	L_3 mm	L_1 mm	Shank mm	Part-No.
Solid tungsten carbide						
9,8	7	23,5	2,7	80	12	20535-6-10001-R
Solid tungsten carbide, PCD coated						
9,8	7	23,5	2,7	80	12	20535-6-10002-R

Technical details
Two solid TC spiral cutting edges with helical chip flutes.
Right-hand rotation - down cut (neg.). For mechanical feed.

PCD coated:
For all common board materials. With significant extended tool life.

Without coating:
For solid wood and common board materials.

Application
For machining chip free profile grooves for the "Lamello Clamex P" - system connectors on CNC five axis machining centres.

Advantages:
- Longer tool life thanks to high-grade tungsten carbide quality or diamond coating

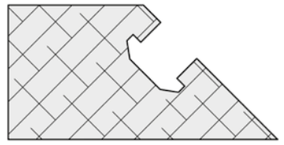

Router Cutters solid TC Z2

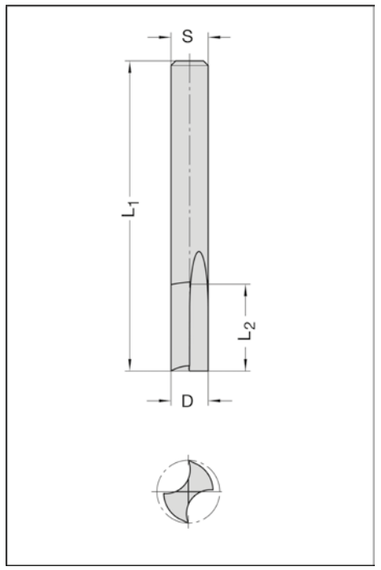

20200-6

D mm	L_2 mm	L_1 mm	Shank mm	Part-No.
5	12	48	5	20200-6-05000-R
6	14	50	6	20200-6-06000-R
8	18	55	8	20200-6-08000-R
10	20	58	10	20200-6-10000-R
12	26	64	12	20200-6-12000-R

Technical details
Solid TC tool body, two straight edges, cutting on bottom and periphery. Parallel shank. Right-hand rotation.
For mechanical and manual feed.

Application
Especially applicable for plastic materials and aluminium through particularly designed flutes (see ill.).
For machining aluminium only applicable after reworking.

Copying Cutters solid TC Z1

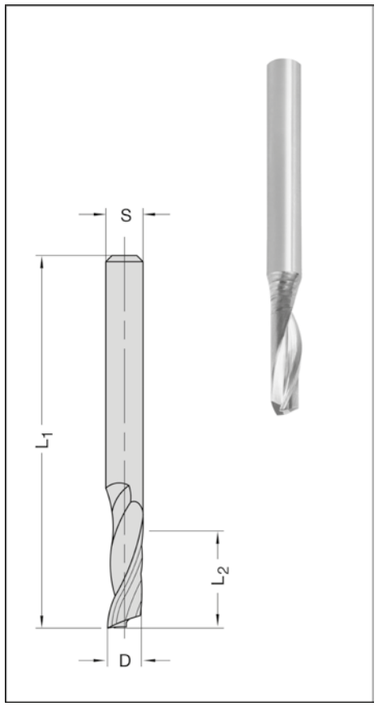

25212 / 25213-6

D mm	L_2 mm	L_1 mm	Shank mm	Part-No.
Down-cut				
3	12	50	3	25212-6-03312-R
4	12	50	4	25212-6-04412-R
6	27	60	6	25212-6-06027-R
8	32	80	8	25212-6-08032-R
Up-cut				
3	12	50	3	25213-6-03312-R
3	12	60	6	25213-6-03012-R
4	12	50	4	25213-6-04412-R
4	12	60	6	25213-6-04012-R
5	17	50	5	25213-6-05517-R
5	16/35[1)]	80	8	25213-6-05080-R
5	20/35[1)]	90	8	25213-6-05090-R
5	45[1)]	100	8	25213-6-05045-R
6	16	60	6	25213-6-06016-R
6	27	60	6	25213-6-06027-R
6	40[1)]	80	6	25213-6-06040-R
8	22	80	8	25213-6-08022-R
8	32	80	8	25213-6-08032-R
8	40[1)]	80	8	25213-6-08040-R
10	32	80	10	25213-6-10032-R

[1)] Long design not applicable for working on complete cutting length.

Technical details
Spiral single cutting edge, with up-cut or down-cut, cutting on bottom and periphery. Right-hand rotation.
Left-hand rotation available on request.

Application
For grooving, jointing, finishing, panel-sizing of aluminium and synthetic parts, various kinds of wood composites and panel materials, on routing and copying machines with or without CNC control.
Applicable also for solid wood and chipboard. Long design especially for thin-walled or arched parts.
Increased breakage risk when using the complete cutting length.

Down-cut (No. 25212, negative spiral): chip removal downwards, e.g. for thin synthetic materials.
Up-cut (No. 25213, positive spiral): chip removal upwards, for well-clamped workpieces.

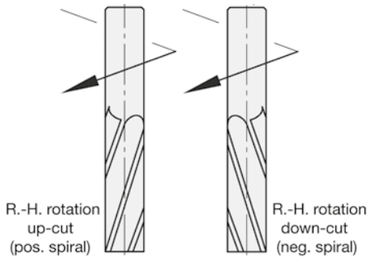

Finishing Cutters GIGASPEED solid TC

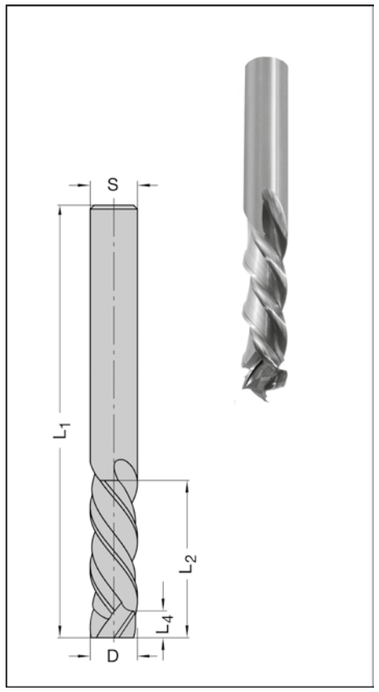

20250-6 Z3+3

D mm	L_2 mm	L_4 mm	L_1 mm	Shank mm	JSO - XD	Part-No.
8	20	6	80	8	-	20250-6-08020-R
10	25	6	90	10	-	20250-6-10025-R
10	30	6	90	10	-	20250-6-10030-R
12	30	6	100	12	-	20250-6-12030-R
12	35	6	100	12	-	20250-6-12035-R
12	40	6	100	12	-	20250-6-12040-R
14	35	8	100	14	-	20250-6-14035-R
16	35	8	110	16	-	20250-6-16035-R
16	40	8	110	16	-	20250-6-16040-R
16	45	8	110	16	-	20250-6-16045-R
18	45	8	108	18	-	20250-6-18045-R
20	45	10	130	20	-	20250-6-20045-R
20	50	10	130	20	-	20250-6-20050-R
20	55	10	130	20	-	20250-6-20055-R

Technical design
Three staggered solid TC spiral cutting edges each, with maximum alternative shear cut. Parallel shank.
Cutting on bottom and periphery. Right-hand rotation. For mechanical feed.

Application
For grooving, jointing, finishing, sizing of long fibrous or very soft worpiece materials (e.g. poplar plywood) and coatings / laminations (veneer, decor papers), soft and hard solid wood, as well as for MDF and Mulitplex.
Also recommendable for nesting operations of plasterboard.
Limited recommendable for chipboard.

Solid Carbide Milling Cutters

Finishing Cutters solid TC

with alternate shear angle

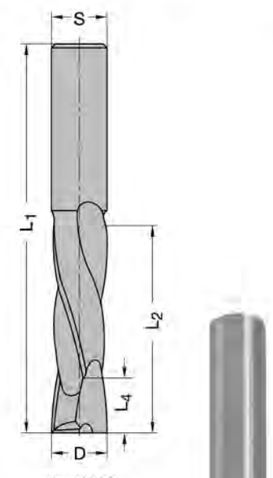

No. 20252

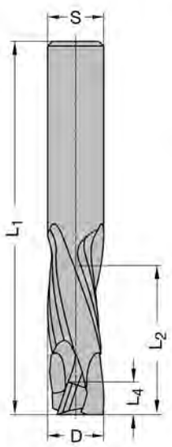

No. 20253

20252 Z2+2

D mm	L_2 mm	L_4 mm	L_1 mm	Shank mm	JSO - XD	Part-No.
8	22	8	70	8	X	20252-6-08022-R
10	32	9	80	10	X	20252-6-10032-R
10*	32	9	70	10	X	20252-6-10132-R
12	32	12	80	12	X	20252-6-12032-R
12	42	10	100	12	X	20252-6-12042-R
16	42	12	105	16	X	20252-6-16042-R
16	52	12	115	16	X	20252-6-16052-R
20	52	15	130	20	X	20252-6-20052-R

*** HW04 for soft plywood and solid wood, especially for paper laminated poplar plywood in the caravan industry.**

20253 Z3+3

D mm	L_2 mm	L_4 mm	L_1 mm	Shank mm	JSO - XD	Part-No.
10	22	7	70	10	X	20253-6-10022-R
10	32	7	80	10	X	20253-6-10032-R
12	24	7	80	12	X	20253-6-12024-R
12	32	7	80	12	X	20253-6-12032-R

Technical details

Two or three staggered solid TC spiral cutting edges each, with alternate shear cut. Parallel shank. Cutting on bottom and periphery. Right-hand rotation. For mechanical feed.

JSO-XD non-stick coating for improved wear resistance and a longer life time.

Application

For grooving, jointing, finishing, panel sizing of various kinds of wood composites and different types of panel materials on CNC machines. Perfect edge quality due to compressive shear cutting action.

Application data:
R.P.M. = 18 000 - 35 000
Z = 2+2 for feed rates up to 20 m/min.
Z = 3+3 for feed rates up from 20 m/min.

Especially applicable for nesting operation.

- Low cutting force
- Good chip removal
- Clean edges on both sides

Solid Carbide Milling Cutters

Finishing Cutters solid TC

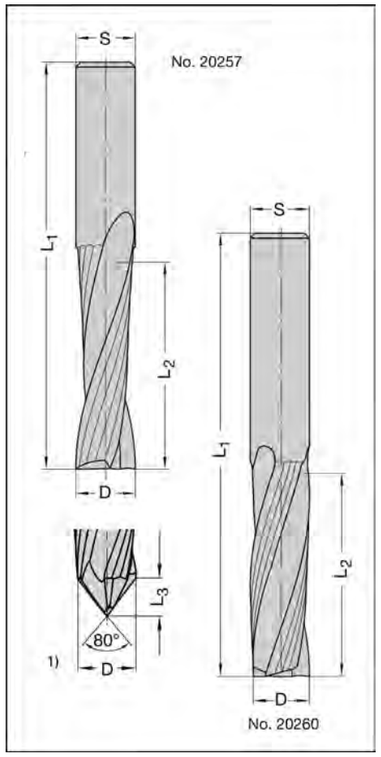

1) Solid TC drilling cutters for through holes see page 3.8

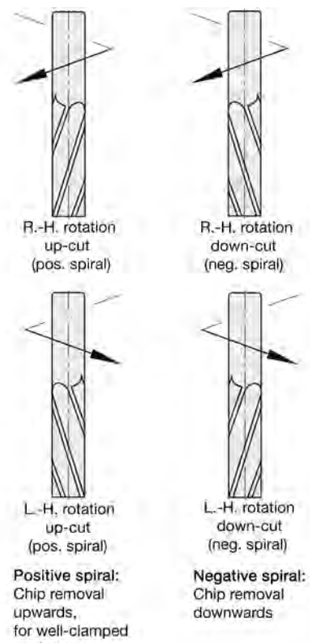

20257 / 20258 Z2 right-hand rotation

D mm	L_2 mm	L_1 mm	Shank mm	JSO - XD	Part-No.
Up - cut (pos.)					
5	17	50	5	-	20257-6-05017-R
6	17	60	6	-	20257-6-06017-R
6	27	60	6	-	20257-6-06027-R
8	25	80	8	-	20257-6-08025-R
8	32	80	8	-	20257-6-08032-R
10	30	75	10	-	20257-6-10030-R
12	42	90	12	-	20257-6-12040-R
16	55	110	16	-	20257-6-16050-R
20	55	115	20	-	20257-6-20050-R
Down - cut (neg.)					
5	17	50	5	-	20258-6-05017-R
6	17	60	6	-	20258-6-06017-R
7	20	80	8	-	20258-6-07020-R
8	25	80	8	-	20258-6-08025-R
10	30	75	10	-	20258-6-10030-R
12	42	90	12	-	20258-6-12040-R

20260 / 20261 Z3 right-hand rotation

D mm	L_2 mm	L_1 mm	Shank mm	JSO - XD	Part-No.
Up - cut (pos.)					
12	42	90	12	X	20260-6-12040-R
14	55	110	14	X	20260-6-14055-R
16	35	90	16	X	20260-6-16035-R
16	55	110	16	X	20260-6-16055-R
18	55	115	18	X	20260-6-18055-R
20	55	115	20	X	20260-6-20055-R
20	75	135	20	X	20260-6-20075-R
20*	107	167	20	X	20260-6-20107-R
Down - cut (neg.)					
12	42	90	12	X	20261-6-12040-R
16	55	110	16	X	20261-6-16055-R

*** Special TC grade HW 07 for significantly improved life time**

20262 Z3 left-hand rotation

D mm	L_2 mm	L_1 mm	Shank mm	JSO - XD	Part-No.
Up - cut (pos.)					
16	55	110	16	-	20262-6-16055-L
20	75	135	20	-	20262-6-20075-L

Technical details

Two or three solid TC spiral cutting edges, cutting on bottom and periphery, parallel shank.
Up from D = 16 mm for mechanical feed only.

JSO-XD non-stick coating for improved wear resistance and a longer life time.

Application

For severing, copying, panel-sizing etc. of solid wood, various kinds of wood composites and other composite materials on CNC machines. For smoothing or finishing with a maximum offset of 5 mm. Long tool life and minor feed force.

Z = 2 for feed rates of less than 10 m/min.
Z = 3 for feed rates of more than 10 m/min.

Roughing Cutters solid TC

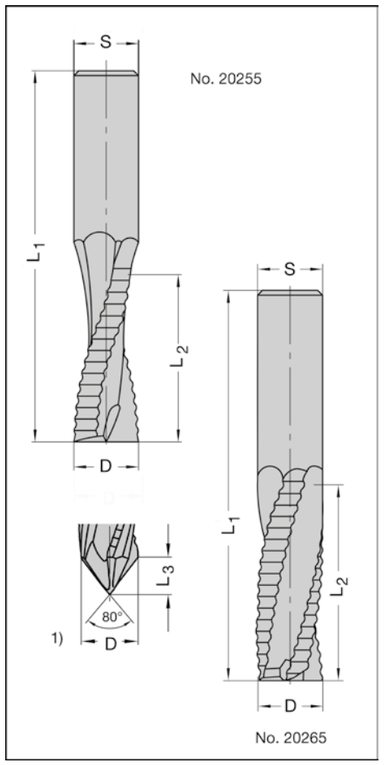

20255 / 20256 Z2 right-hand rotation

D mm	L_2 mm	L_1 mm	Shank mm	JSO - XD	Part-No.
Up - cut (pos.)					
10	30	75	10	-	20255-6-10030-R
12	42	90	12	-	20255-6-12040-R
16	55	110	16	-	20255-6-16050-R
Down - cut (neg.)					
10	30	75	10	-	20256-6-10030-R

20264 / 20265 Z3 right-hand rotation

D mm	L_2 mm	L_1 mm	Shank mm	JSO - XD	Part-No.
Up - cut (pos.)					
12	42	90	12	X	20265-6-12040-R
14	55	110	14	X	20265-6-14055-R
16	35	90	16	X	20265-6-16035-R
16	55	110	16	X	20265-6-16055-R
16*	55	110	16	X	20265-6-16155-R
18	55	115	18	X	20265-6-18055-R
18[1)]	55	135	25	X	20264-6-18556-R
20	55	115	20	X	20265-6-20055-R
20	75	135	20	X	20265-6-20075-R
20*	90	150	20	X	20265-6-20090-R
20	107	167	20	X	20265-6-20107-R
30	120	195	25	X	20265-6-30120-R

*** Special TC grade HW 07 for significantly improved life time**
[1)] With soldered shank of tool steel and complete with length adjusting screw

[1)] Solid TC drilling cutter for through holes see page 3.8

20267 Z3 left-hand rotation

D mm	L_2 mm	L_1 mm	Shank mm	JSO - XD	Part-No.
Up - cut (pos.)					
16	55	110	16	-	20267-6-16055-L

Technical details
Two or three solid TC spiral cutting edges, with chip-breaking roughing teeth (wave design).
Common shank and cutting diameter. Cutting on bottom and periphery.
Up from D = 16 mm for mechanical feed only.

JSO-XD non-stick coating for improved wear resistance and a longer life time.

Application
For severing, copying, panel-sizing etc. in roughing quality of solid wood, various kinds of wood composites and other composite materials on CNC machines.
Long tool life and minimum feed force because of high chip removal rates.

Z = 2 for feed rates of less than 10 m/min.
Z = 3 for feed rates of more than 10 m/min.

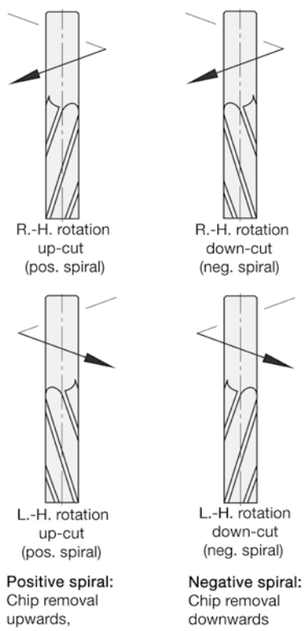

Positive spiral: Chip removal upwards, for well-clamped

Negative spiral: Chip removal downwards

Roughing-Finishing Cutters solid TC Z3

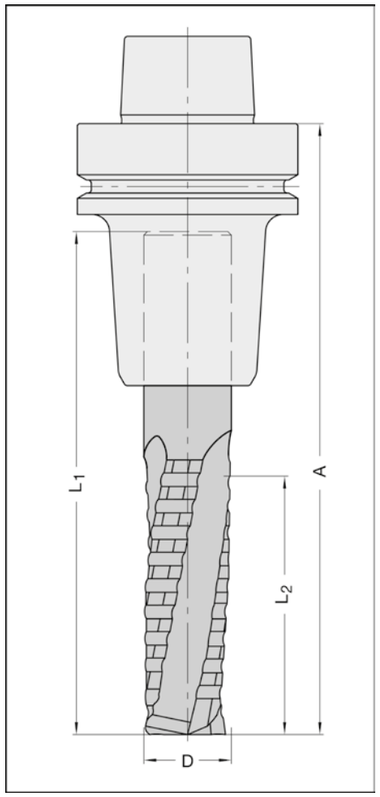

20259

D mm	L_2 mm	L_1 mm	A mm	Shank mm	Part-No.
Right-hand rotation / up - cut					
12	45	100	-	12	20259-6-12045-R
14	45	100	-	14	20259-6-14045-R
16	55	110	-	16	20259-6-16055-R
18	60	120	-	18	20259-6-18060-R
20	75	130	-	20	20259-6-20075-R
Left-hand rotation / up - cut					
18	60	120	-	18	20259-6-18060-L
20	75	130	-	20	20259-6-20075-L
Complete with heat shrinking chuck ThermoTec right-hand rotation / up - cut					
12	45	100	132	HSK-F 63	20259-6-12063-R
14	45	100	132	HSK-F 63	20259-6-14063-R
16	55	110	142	HSK-F 63	20259-6-16063-R
18	60	120	182	HSK-F 63	20259-6-18063-R
20	75	130	162	HSK-F 63	20259-6-20063-R
Complete with heat shrinking chuck ThermoTec left-hand rotation / up - cut					
18	60	120	182	HSK-F 63	20259-6-18063-L
20	75	130	162	HSK-F 63	20259-6-20063-L

Technical details
Roughing-finishing cutters of special tungsten carbide quality HW 07, with JSO-XD-coating for improved life time. Cutting on bottom and periphery.
On request complete with heat shrinking chuck ThermoTec for running as smooth as possible.
For mechanical feed.

Application
Especially for cutting hardwood almost in finish cutting quality. Particulary in stair and frame-work production.

- less effort through devided cut Z1+1+1
- less edge rigging due to JSO-XD-coating
- In combination with heat shrinking chuck ThermoTec high cutting quality, through excellent concentric run and high smooth running.

Application data:

Workpiece material	R.P.M.	v_f [m/min]	Application
Hardwood	18 - 24 000	8 - 12 12 - 18 along 5 - 8 cross	Savering Sizing
Softwood	18 - 24 000	10 - 15 15 - 20 along 7 - 10 cross	Savering Sizing
Board-materials	18 - 24 000	10 - 18 15 - 25	Savering Sizing

Drilling Cutters solid TC

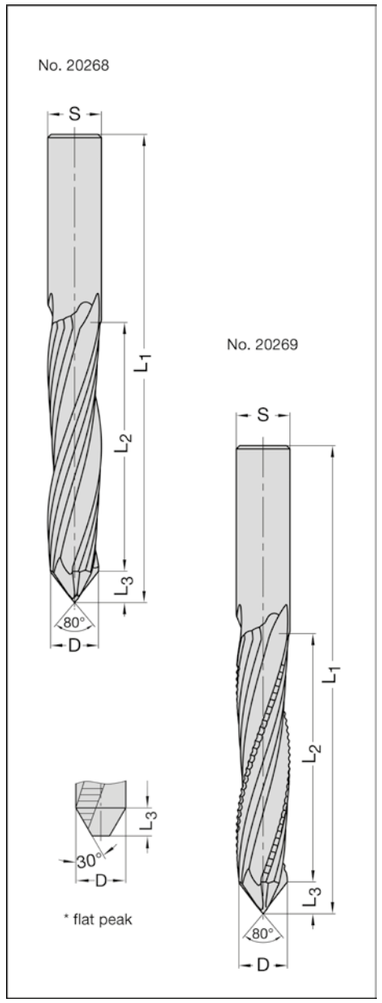

20268 for drilling peep-holes and through holes

D mm	L_2 mm	Z	L_3 mm	L_1 mm	Shank mm	Part-No.
12	47	2	9	110	12	20268-6-12000-R
14	42	2	9	100	14	20268-6-14000-R
16	51	2	9	120	16	20268-6-16000-R
16	73	3	9	140	16	20268-6-16373-R

20269 for latchholes and keyholes

D mm	L_2 mm	Z	L_3 mm	L_1 mm	Shank mm	Part-No.
16	51	2	9	120	16	20269-6-16000-R
16	73	3	9	140	16	20269-6-16373-R

Technical details
Two resp. three solid TC spiral cutting edges with plunge point 80°, No. 20269 with chip-breaking roughing teeth. With parallel shank. Right-hand rotation/up-cut. For mechanical feed.

JSO-XD non-stick coating for improved wear-resistance and longer life time.

Application
Drilling cutter No. 20268 designed for drilling peep-holes and through-holes, roughing cutter No. 20269 for latchholes and keyholes on CNC machines.

Recommended use of solid TC drilling cutters

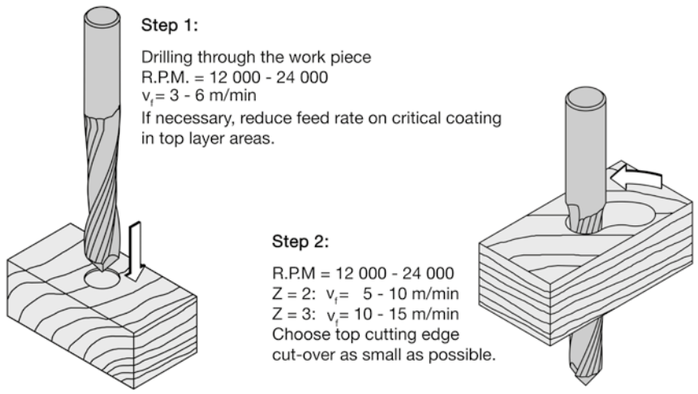

* Modification to flat peak design for oscillating plunge cutting also possible on request. Prices see page 7.30

Corner Forming Router Cutters solid TC Z2

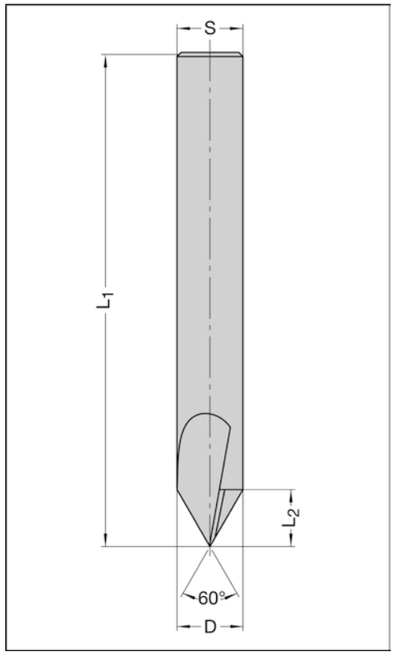

20247

D mm	L_2 mm	L_1 mm	Angle	Shank mm	Part-No.
Left-hand rotation					
16	14	120	60°	16	20247-6-16000-
Right-hand rotation					
16	14	120	60°	16	20247-6-16000-

Technical details
Common shank and drilling diameter, solid TC tool with two cutting edges, precise ground centre point o bottom. For mechanical feed.

Application
For corner forming / finish cutting of corners for openings (e.g. door production) on 5-axis CNC machines Can also be used for engraving and decorative groove work.

Lock Case Cutters solid TC

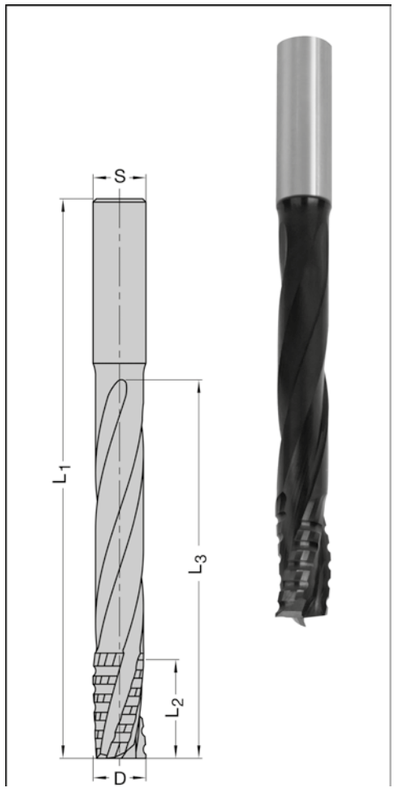

20254 Z2 or Z3

D mm	L_2 mm	L_3 mm	L_1 mm	Z	Shank mm	Part-No.
14	25	100	155	2	14 x 50	20254-6-14015-
16	25	120	175	2	16 x 50	20254-6-16025-
16	30	115	170	3	16 x 50	20254-6-16003-
16	30	115	175	3	20 x 45	20254-6-16005-
18	30	120	170	3	20 x 45	20254-6-18003-

Technical details
Two or three solid TC cutting edges with chip-breaking roughing teeth. Right-hand rotation/up-cut. Clamping flats for Weldon tool-holders (page 4.23) at extra costs (page 7.30).

JSO-XD non-stick coating for improved wear-resistance and longer life time.

Application
Designed to machine lock case pockets with step-by-step adjustment.

Solid Carbide Milling Cutters

Router Cutters solid TC Z1

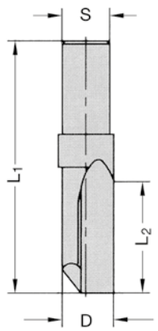

20038-6 for concentric use

D mm	L_2 mm	L_1 mm	Shank mm	Part-No.
8	22	58	8 x 25	20038-6-08022-R
10	22	55	9,5 x 20	20038-6-10000-R

Technical details
Solid TC tool body with one straight edge, cutting on bottom and periphery.
Cutting portion with back relief, for use in concentric or slightly eccentric clamping chucks.
Right-hand rotation. For mechanical and manual feed.

Application
For general routing operations, e.g. grooving, jointing, etc. in hardwood, compressed wood, various kinds of wood composites and other composite materials. For use on stationary routers and CNC machines.

Coating for solid TC

39888-6 JSO-XD coating

	Part-No.
Additional costs on request (depending on quantity and diameter)	39888-6-00000-0

for
Solid TC drills
Solid TC finishing cutters
Solid TC roughing cutters
Solid TC roughing-finishing cutters
Solid TC lock case cutters
Solid TC tips

Technical details
Universal JSO-multi layer priority coating for machining synthetic, solid wood and all kind of common board materials, with dark blue appearance. Already available for a lot of standard tools without additional costs. (Please note comment in article description.) For subsequent applying on standard tools as well as for special production, on request as JSO-X-single layercoating possible.

Application
To improve performance in different kind of applications.
Depending on work piece material, a life time improvement of 50 - 100 % (according to work piece material) in new condition is achievable. Reduced life time advantage after regrinding of approx. the half.

Application data:
Compared to coated tools no difference.
For machining synthetic materials, tools can be used with 20 % higher feed rates due to less friction.

- **high wear resistant**
- **longer life time**
- **reduced cutting edge rigging**

Further coatings on request !

End Mill Cutters solid TC Z1

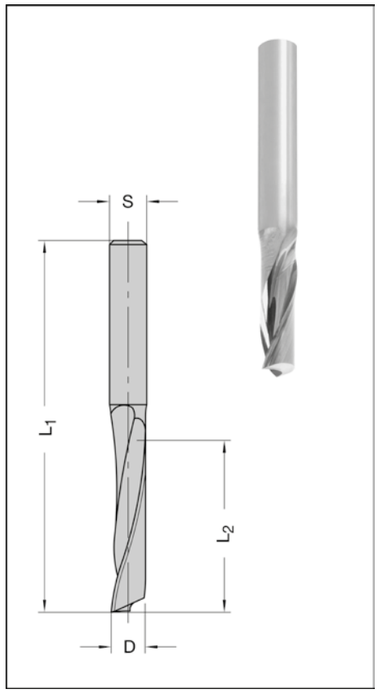

93103 HW 04

D mm	L_2 mm	L_1 mm	Shank mm	Part-No.
2	5	50	6	93103-6-02050-R
4	15	50	6	93103-6-04150-R
6	20	60	6	93103-6-06200-R
8	25	70	8	93103-6-08250-R
10	30	70	10	93103-6-10300-R

93113 HW 08

D mm	L_2 mm	L_1 mm	Shank mm	Part-No.
6	20	60	6	93113-6-06200-R
8	25	70	8	93113-6-08250-R

Technical details
Single tooth solid carbide router cutters made of either standard (HW 04) or micro-grain carbide (HW 08), with special cutting edge geometry for the best surface quality. With polished flutes and also with polished clearance for optimum chip removal and superior cutting results. Right-hand rotation - up-cut.

Application
For polish cutting (clearcut milling, grooving, sizing and severing) of thermoplastics e.g. PMMA (acrylic glass), PC (polycarbonate), PE (polyethylene), PP (polypropylene), PS (polystyrene), ABS (acrylonitrile-butadiene-styrene) and PVC (polyvinyl chloride). Nearly clearcut surface of the machined edges through pre-cutting against feed and then finish-cutting (with low chip removal) with feed.

Application data:

Pre-cutting against feed
R.P.M. = 18 000 - 24 000, feed rate v_f = 2 - 6 m/min.

Finish-cutting with feed
R.P.M. = 18 000 - 24 000, feed rate v_f = 0,1 - 0,4 m/min., lateral adjustement a_e = 0,1 mm - 0,3 mm

To avoid heat development resp. stress whitening, we recommend to support the chip removal through compressed air.

Multi-tooth End Mill cutters solid TC

Thermoplastics

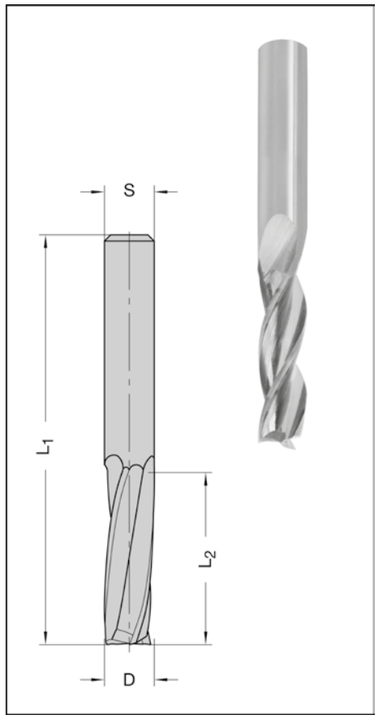

93303 HW 04 Z3

D mm	L_2 mm	L_1 mm	Shank mm	Part-No.
6	20	50	6	93303-6-06200-R

93503 HW 04 Z5

D mm	L_2 mm	L_1 mm	Shank mm	Part-No.
8	30	70	8	93503-6-08300-R
10	40	70	10	93503-6-10400-R

Technical details
Multi tooth solid carbide router cutters with special cutting edge geometry for the best surface quality.
With polished flutes and also with polished clearance for optimum chip removal and superior cutting results.
Right-hand rotation - up-cut.

Applications
For polish cutting (clearcut milling, grooving, sizing and severing) of thermoplastics e.g. PMMA (acrylic glass), PC (polycarbonate), PE (polyethylene), PP (polypropylene), PS (polystyrene), ABS (acrylonitrile-butadiene-styrene) and PVC (polyvinyl chloride).
Nearly clearcut surface of the machined edges through pre-cutting against feed and then finish-cutting (with low chip removal) with feed.

Application data:

Rough-cutting
R.P.M. = 18 000 - 24 000, feed rate v_f = 6 - 10 m/min. (Z3) resp. 8 - 15 m/min. (Z5)

Finish-cutting with feed
R.P.M. = 18 000 - 24 000, feed rate v_f = 0,3 - 0,8 m/min., lateral adjustement a_e = 0,1 - 0,3 mm

V-Groove Cutters solid TC Z1

Thermoplastics

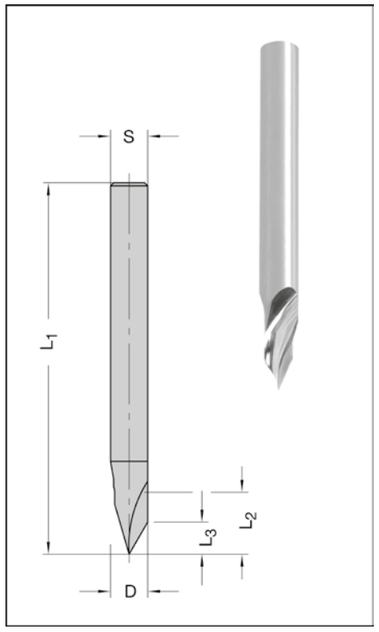

96123 HW 04

D mm	L_2/L_3 mm	Angle degree	L_1 mm	Shank mm	Part-No.
6	10/5	60°	60	6	96123-6-06600-R
6	10/3	90°	60	6	96123-6-06900-R

Technical details
Single tooth solid carbide router cutters with special cutting edge geometry for the best surface quality.
With polished flutes and also with polished clearance for optimum chip removal and superior cutting results.
Right-hand rotation - up-cut.

Application
For machining (lettering, mitre folding and bevelling) of thermoplasics e.g. PMMA (acrylic glass), PC (polycarbonate), PE (polyethylene), PS (polystyrol), ABS (acrylonitrile-butadiene-styrene) and PVC (polyvinyl chloride).

Application data:

Pre-cutting
R.P.M. = 18 000 - 24 000, feed rate v_f = 2 - 6 m/min

Finish-cutting
R.P.M. = 18 000 - 24 000, feed rate v_f = 0,3 - 0,6 m/min., axial adjustement a_p = 0,5 - 1,0 mm

Ball Nose Cutters solid TC Z1

Thermoplastics

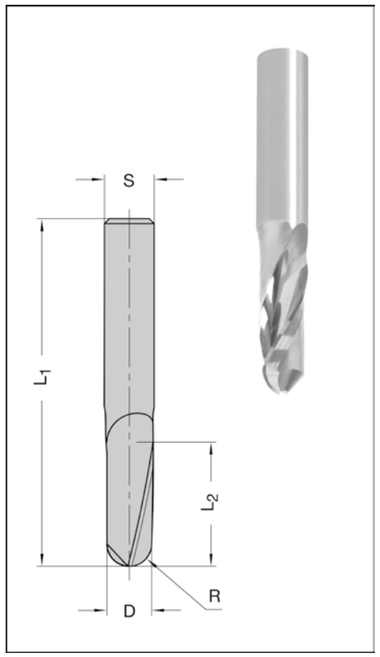

96113 HW 04

D mm	L_2 mm	R mm	L_1 mm	Shank mm	Part-No.
2	5	1	50	6	96113-6-02050-R
4	15	2	50	6	96113-6-04150-R
6	20	3	60	6	96113-6-06200-R
8	25	4	70	8	96113-6-08250-R
10	30	5	70	10	96113-6-10300-R

Technical details
Single tooth solid carbide router cutters with special cutting edge geometry for the best surface quality.
With polished flutes and also with polished clearance for optimum chip removal and superior cutting results.
Right-hand rotation - up-cut.

Applications
For machining (lettering, cove cutting, 3D-cutting, sizing, severing and drilling) of thermoplastics e.g. PMMA (acrylic glass), PC (polycarbonate), PE (polyethylene), PP (polypropylene), PS (polystyrol), ABS (acrylonitrile-butadiene-styrene) and PVC (polyvinyl chloride).

Application data:

Pre-cutting
R.P.M. = 16 000 - 24 000, feed rate v_f = 2 - 6 m/min.

Finish-cutting with feed
R.P.M. = 16 000 - 24 000, feed rate v_f = 0,3 - 0,6 m/min., axial adjustement a_p = 0,5 - 1,0 mm

Drilling
R.P.M. = 16 000 - 24 000, feed rate v_f = 0,5 - 1,0 m/min.

Solid Carbide Milling Cutters

Reversible Milling Cutters & Carbide Cutters

Precision creates value

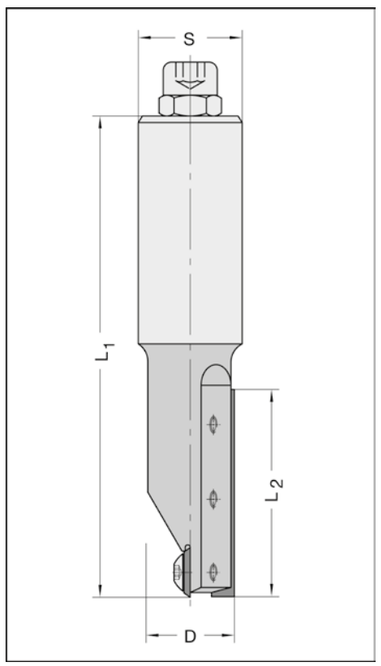

22360

D mm	L_2 mm	L_1 mm	Shank mm	Part-No.
16	30	91	16 x 45 m. E. M 6	22360-5-16303-R
16	50*	106	16 x 45 m. E. M 6	22360-5-16503-R
16	50*	116	25 x 55 m. E. M 8	22360-5-16506-R
18	50	116	20 x 55 m. E. M 8	22360-5-18505-R
18	50	116	25 x 55 m. E. M 8	22360-5-18506-L
18	50	116	25 x 55 m. E. M 8	22360-5-18506-R
20	50	116	20 x 55 m. E. M 8	22360-5-20505-R
20	50	116	25 x 55 m. E. M 8	22360-5-20506-R

* For higher load please use No. 22030 (page 1.9) or No. 22005 (page 4.2), if axial plunge cutting is not required.

Technical details

Single edge design. With one reversible TC centre tip for plunge cutting. Clamping of tips by clamping wedges. For manual and mechanical feed.

Application

For general routing operations, e.g. grooving, jointing, rebating, etc on stationary routers, CNC machines and similar high-speed machines.

Spare parts / Accessories		Part-No.
Reversible TC tip	30 x 5,5 x 1,1 mm, HW 02**	72013-6-30055-0
Reversible TC tip	50 x 5,5 x 1,1 mm, HW 02**	72013-6-50055-0
Reversible TC tip	12 x 12 x 1,5 mm, plunge tip	72014-6-01201-0
Clamping wedge	for D= 16 x 30 mm R	39360-0-16030-R
Clamping wedge	for D= 16 x 30 mm L	39360-0-16030-L
Clamping wedge	for D= 16 x 50 mm R	39360-0-16050-R
Clamping wedge	for D= 16 x 50 mm L	39360-0-16050-L
Clamping wedge	for D= 18 x 30 mm R	39360-0-18030-R
Clamping wedge	for D= 18 x 30 mm L	39360-0-18030-L
Clamping wedge	for D= 18 / ¾" x 50 mm R	39360-0-18050-R
Clamping wedge	for D= 18 / ¾" x 50 mm L	39360-0-18050-L
Clamping wedge	for D= 20 x 30 mm R	39360-0-20030-R
Clamping wedge	for D= 20 x 30 mm L	39360-0-20030-L
Clamping wedge	for D= 20 x 50 mm R	39360-0-20050-R
Clamping wedge	for D= 20 x 50 mm L	39360-0-20050-L
Clamping wedge	for D= 22 x 30 mm R	39360-0-22030-R
Torx clamping screw	M 3,5 x 5,5 T15, for D=16/18/ ¾" mm	39080-0-35551-R
Torx clamping screw	M 3,5 x 6,5 T15, for D= 20/22 mm	39080-0-35651-R
Torx clamping screw	M 4 x 5,9, extra-large head, T15, for D=14,5/16/18 mm plunge tips	39076-0-04000-R
Torx clamping screw	M 4 x 7, extra-large head, T15, for D= 20/22 mm plunge tips	39076-0-04070-R
Torx key	T15, with handle	39077-0-04015-2

** For reversible TC tips of HW 01 (for MDF and particularly abrasive materials) see page 7.1.

Router Cutters w. reversible TC tips Z2

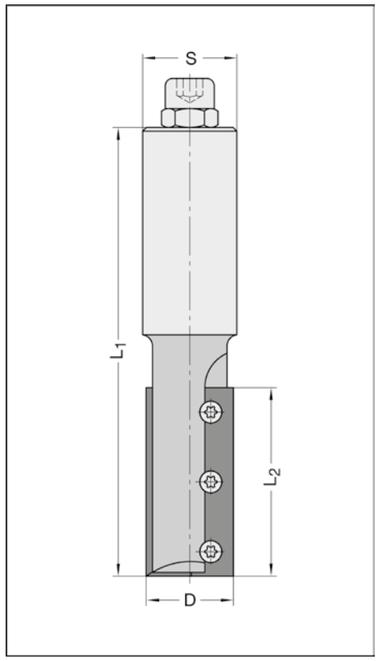

22035 with TCT plunge tip

D mm	L_2 mm	L_1 mm	Shank mm	Part-No.
25	50	119	25 x 55 m. E. M 8	22035-5-25506-R
30	50	118	25 x 55 m. E. M 8	22035-5-30506-R

Technical details
With two straight reversible TC tips, 50 mm, 3-hole-design, face screw fixing.
With TCT centre tip for plunge cutting. Right-hand rotation. For mechanical feed.

Application
For jointing, trimming, rebating in solid wood and various kinds of wood composites on stationary routers with or without CNC control.

Spare parts / Accessories		Part-No.
Reversible TC tip	50 x 12 x 1,7 mm, 4-sided, 3-hole des., HW 01	72016-6-05001-0
Reversible TC tip	50 x 12 x 1,7 mm, 4-sided, 3-hole des., HW 02	72016-6-05017-0
Reversible TC tip	50 x 12 x 1,7 mm, 4-sided, 3-hole des., HW 03	72016-6-05004-0
Torx clamping screw	M 4 x 6, T15, for D= 25 mm	39081-0-04060-R
Torx clamping screw	M 4 x 5,9, extra-large head, T15, f. D = 30 mm	39076-0-04000-R
Torx key	T15, with handle	39077-0-04015-2

Router Cutters w. reversible TC tips Z2 back screw fixing

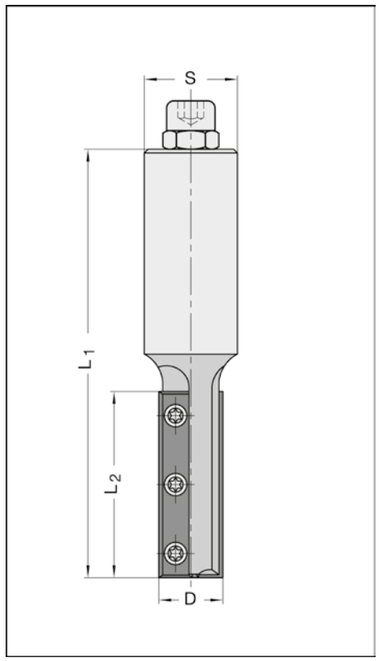

22005 with TCT plunge tip

D mm	L_2 mm	L_1 mm	Shank mm	Part-No.
16	30	100	25 x 55 m. E. M 8	22005-5-16306-R
16	50	120	25 x 55 m. E. M 8	22005-5-16506-R
18*	50	115	20 x 55 m. E. M 8	22005-5-18505-R
18*	50	115	25 x 55 m. E. M 8	22005-5-18506-R

* TCT centre tip for ramp plunge cutting

Technical details
With two reversible TC tips, TC grade HW 03 (ø 16 mm) resp. TC grade HW 01 (ø 18 mm) , cutting on bottom and periphery. Back screw fixing. Sturdy body. ø 18 mm with additionally TCT centre tip for ramp plunge cutting. Right-hand rotation. For mechanical feed.

Application
For general routing operations, e.g. grooving, jointing, panel-sizing, rebating, severing and apertures in solid wood as well as in wood composites and various panel materials (choose the appropriate TC grade).
For use on stationary routers, with or without CNC control.

Spare parts / Accessories		Part-No.
Reversible TC tip	30 x 9 x 1,5 mm, 4-sided, HW 03	72005-6-03003-0
Reversible TC tip	30 x 9 x 1,5 mm, 4-sided, HW 01	72005-6-03001-0
Reversible TC tip	50 x 9 x 1,5 mm, 4-sided, HW 03, 3-hole design	72005-6-05003-0
Reversible TC tip	50 x 9 x 1,5 mm, 4-sided, HW 01, 3-hole-design	72005-6-05001-0
Torx clamping screw	M 3,5 x 4,8, T15	39080-0-03548-R
Torx key	T15, with handle	39077-0-04015-2

HW 03 = top standard grade
HW 01 = for MDF and particularly abrasive materials

Router Cutters w. reversible TC tips Z2

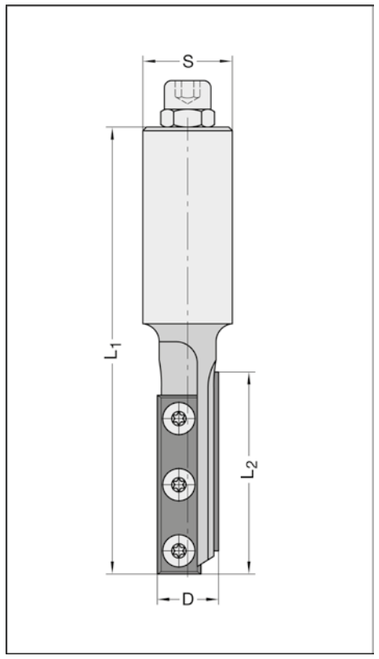

22030 with TCT plunge tip

D mm	L_2 mm	L_1 mm	Shank mm	Part-No.
16	55	125	20 x 55 m. E. M 8	22030-5-16505-R
18	55	125	20 x 55 m. E. M 8	22030-5-18505-L
18	55	125	20 x 55 m. E. M 8	22030-5-18505-R
18	55	125	25 x 55 m. E. M 8	22030-5-18506-L
18	55	125	25 x 55 m. E. M 8	22030-5-18506-R
20	55	125	20 x 55 m. E. M 8	22030-5-20505-R
20	55	125	25 x 55 m. E. M 8	22030-5-20506-L
20	55	125	25 x 55 m. E. M 8	22030-5-20506-R
22	55	125	25 x 55 m. E. M 8	22030-5-22506-R

Technical details
With two staggered reversible TC tips, 4-sided, back screw fixing. With TCT centre tip for plunge cutting.
For manual and mechanical feed.

Application
For grooving, jointing, trimming and rebating, for severing and apertures in solid wood, various kinds of wood composites and boards, on stationary routers with or without CNC control.

Spare parts / Accessories		Part-No.
Reversible TC tip	30 x 12 x 1,5 mm, 4-sided, HW 02 for D= 18 x 35 mm (former standard)	72014-6-03000-0
Reversible TC tip	50 x 9 x 1,5 mm, 4-sided, 3-hole-des., HW 01 for D= 16 x 55 mm	72005-6-05001-0
Reversible TC tip	50 x 12 x 1,7 mm, 4-sided, 3-hole des., HW 02 for D= 18 - 22 x 55 mm	72016-6-05017-0
Torx clamping screw	M 3,5 x 4,8 T15, for D= 16 mm	39080-0-03548-R
Torx clamping screw	M 4 x 5,9, extra large head, T15, for D= 18 - 22 mm	39076-0-04000-R
Torx key	T15, with handle	39077-0-04015-2

For spare tips in different TC grades see page 7.4.

Router Cutters w. reversible TC tips Z2

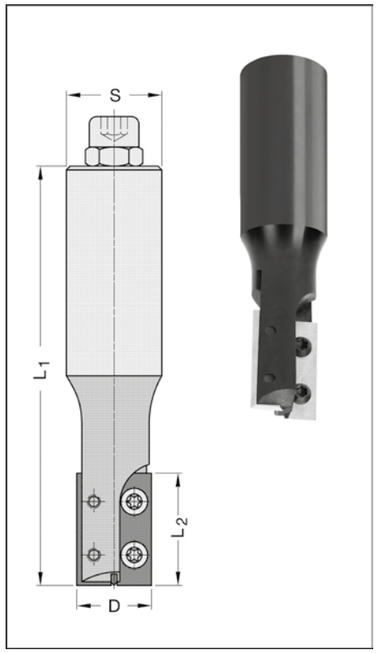

22006 with TCT plunge tip

D mm	L_2 mm	L_1 mm	Shank mm	Part-No.
20	30	110	20 x 55 m. E. M 8	22006-5-20305-R
20	30	110	25 x 55 m. E. M 8	22006-5-20306-R

Technical details
Tool body with two reversible TC tips HW 03 with alternate shear, cutting on bottom and periphery.
Face screw fixing. With TCT centre tip for plunge cutting. Right-hand rotation. For mechanical feed.

Application
For grooving, trimming and rebating of various kinds of wood and wood composites (please select applicable TC grade). TC grade HW01 especially applicable for composite and solid surface materials.

Spare parts / Accessories		Part-No.
Reversible TC tip	30 x 9 x 1,5 mm, 4-sided, HW 03	72005-6-03003-0
Reversible TC tip	30 x 9 x 1,5 mm, 4-sided, HW 01	72005-6-03001-0
Torx clamping screw	M 3,5 x 4, T15	39080-0-03540-R
Torx key	T15, with handle	39077-0-04015-2

HW 03 = top standard grade
HW 01 = for MDF and especially abrasive materials

R. Milling Cutter & C. Cutters

Router Cutters w. reversible TC tips Z2

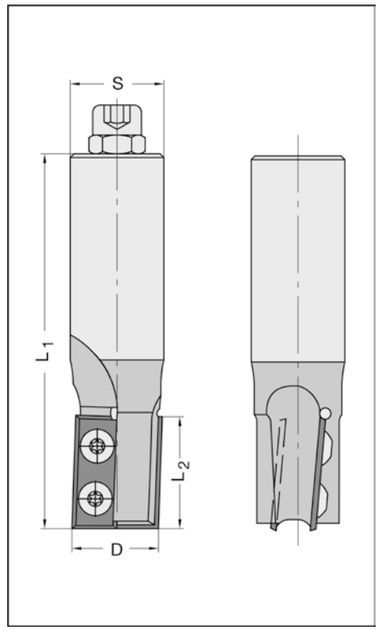

22007

D mm	L_2 mm	L_1 mm	Shank mm	Part-No.
25	30	100	20 x 55 m. E. M 8	22007-5-25305-R
25	30	100	25 x 55 m. E. M 8	22007-5-25306-R

Technical details
Tool body with 2 reversible T.C. **tips HW 22 special grade**, polished design, with alternate shear, cutting on bottom and periphery. Back screw fixing. Without plunge tip. Right-hand rotation. For mechanical feed.

Application
Especially applicable for grooving, jointing, trimming of acrylic glass (PMMA), thermoplastics, Makrolon, polycarbonate (PC), polyethylene (PE) and polypropylen (PP).

Spare parts / Accessories		Part-No.
Reversible TC tip	30 x 12 x 1,5 mm, 4-sided, HW22	72014-6-03008-0
Torx clamping screw	M 4 x 5,9, extra large head, T15	39076-0-04000-R
Torx key	with handle T15	39077-0-04015-2

Router Cutters w. reversible TC tips Z1

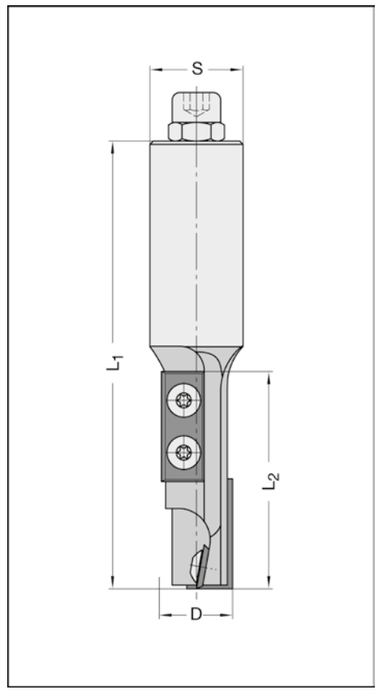

22008 with rev. TC plunge tip

D mm	L_2 mm	L_1 mm	Shank mm	Part-No.
18	50	115	25 x 55 m. E. M 8	22008-5-18506-R
20	58	120	20 x 55 m. E. M 8	22008-5-20585-R
20	58	120	25 x 55 m. E. M 8	22008-5-20586-R

Technical details
With one or two reversible TC tips, cutting on periphery, and one reversible TC centre tip for plunge cutting, with shear angle. Right-hand rotation. For mechanical feed.

Application
For grooving, jointing, trimming and rebating, for severing and apertures in solid wood, various kinds of wood composites and boards. For use on stationary routers with or without CNC control.

Spare parts / Accessories		Part-No.
Reversible TC tip	7,5 x 12 x 1,5 mm, for D= 16/18 mm, HW 02 plunge tip	72010-6-00751-0
Reversible TC tip	9 x 12 x 1,5 mm, for D= 20 mm, HW 02, plunge tip	72010-6-00900-0
Reversible TC tip	30 x 12 x 1,5 mm, 4-sided, HW 02	72014-6-03000-0
Torx key	T15, with handle	39077-0-04015-2
Torx clamping screw	M 3,5 x 4 extra-large head, T15, for D= 16/20 mm periphery tip and D= 20 mm plunge tip	39076-0-03500-R
Torx clamping screw	M 4 x 4 extra-large head, T15, f. D= 18 mm, periphery tip	39076-0-04040-R
Torx clamping screw	M 3,5 x 4, T15, for D= 16 mm plunge tip	39081-0-03540-R
Torx clamping screw	M 4 x 5, T15, for D = 18 mm plunge tip	39081-0-04050-R

For spare tips in different TC grades see pages 7.3 and 7.4

Router Cutter w. reversible TC tips Z2 with rev. TC plunge tip

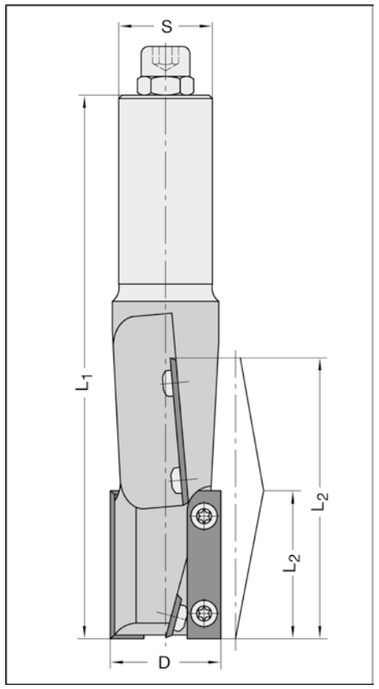

22022 with alternate shear angle

D mm	L_2 mm	L_1 mm	Shank mm	Part-No.
30	75	145	25 x 55 m. E. M 8	22022-5-30756-R

Technical details
With two staggered reversible TC tips each, with alternate shear angle and two reversible TC centre tip for plunge cutting. Upper and lower tips can be interchanged. Right-hand rotation. For mechanical feed.

Application
For high quality finish on solid wood or double-sided laminated panels. For use in concentric chucks on stationary routers and CNC machines.

Spare parts / Accessories		Part-No.
Reversible TC tip	40 x 9 x 1,5 mm, 4-sided, HW 02	72005-6-04002-0
Reversible TC tip	7,5 x 12 x 1,5 mm, HW 02	72010-6-00751-0
Torx clamping screw	M 3,5 x 4, T15, for periphery tips	39080-0-03540-R
Torx clamping screw	M 4 x 5, T15, for plunge tips	39081-0-04050-R
Torx key	T15, with handle	39077-0-04015-2

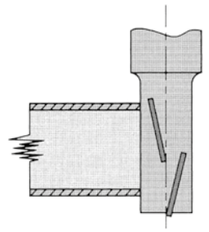

Router Cutters w. interch. TC tips Z1 w. TCT plunge tip

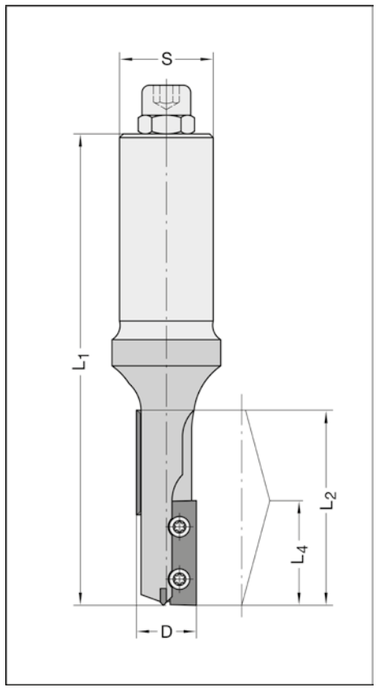

22023 with alternate shear angle

D mm	L_2 mm	L_1 mm	Shank mm	Part-No.
16	50	130	25 x 55 m. E. M 8	22023-5-16506-R
18	50	130	25 x 55 m. E. M 8	22023-5-18506-R

Technical details
With one staggered interchangeable TC tip each, with alternate shear angle, with TCT centre tip for plunge cutting. Upper and lower tips can be interchanged with each other. Right-hand rotation. For mechanical feed.

Application
For high quality finish on double-sided laminated panels.

Spare parts / Accessories		Part-No.
Interch. TC tip	16 x 7 x 1,5 mm (L_2 =30 mm), HW 02	72120-6-01600-0
Interch. TC tip	28 x 7 x 1,5 mm (L_2 =50 mm), HW 02	72120-6-02800-0
Torx clamping screw	M 3 x 4, T 9	39081-0-03040-R
Torx key	T 9, with handle	39077-0-03009-2

Router Cutter w. interch. TC tips Z2

w. TCT plunge tip

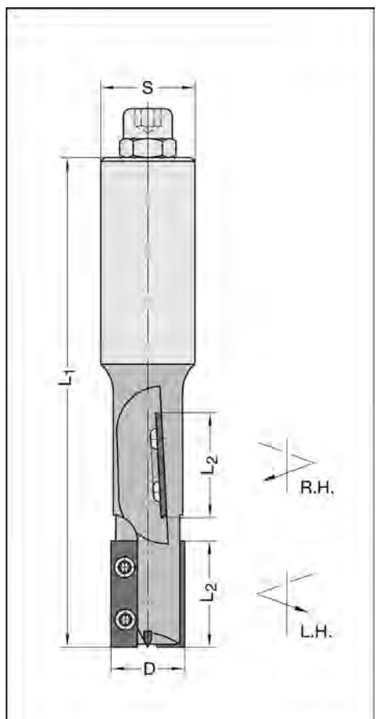

22024 for right-hand and left-hand rotation

D mm	L_2 mm	L_1 mm	Shank mm	Part-No.
20	28	130	25 x 55 m. E. M 8	22024-5-20286-R

Technical details

With two staggered interchangeable TC tips each with shear angle, down-cut. **Upper portion (on shank-side) for right-hand rotation, lower portion for left-hand rotation.** Upper and lower tips can be interchanged. Cutting on bottom. For mechanical feed.

Application

For general routing operations, e.g. jointing, rebating, contour cutting, apertures in solid wood, various kinds of wood composites, etc. on stationary routers and CNC machines.
By readjusting the Z-axis and changing the rotation, the lower portion of the cutter can be used for left-hand rotation.

Spare parts / Accessories		Part-No.
Interch. TC tip	28 x 7 x 1,5 mm, HW 02	72120-6-02800-0
Torx clamping screw	M 3 x 4, T 9	39081-0-03040-R
Torx key	T 9, with handle	39077-0-03009-2

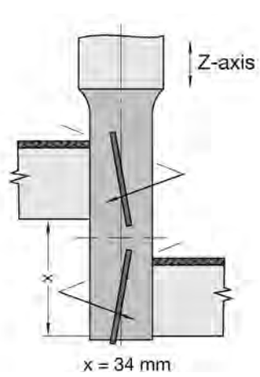

Router Cutters w. reversible TC tips Z2

w. rev. TC plunge tip

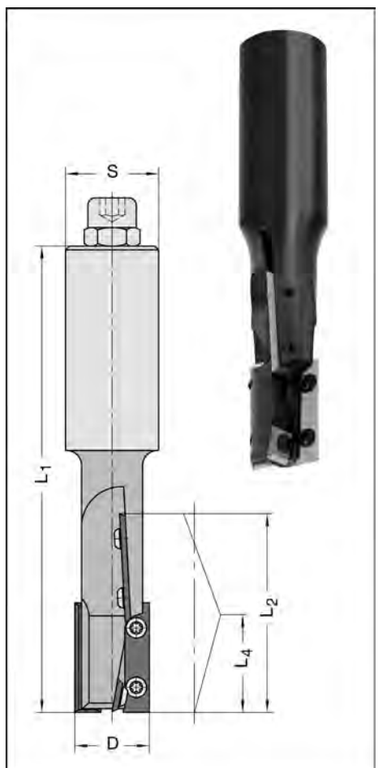

22029 with alternate shear angle

D mm	L_2 mm	L_4 mm	L_1 mm	Shank mm	Part-No.
20	33	16,5	110	¾" x 55 m. E. M 8	22029-5-20334-R
20	33	16,5	110	20 x 55 m. E. M 8	22029-5-20335-R
20	33	16,5	110	25 x 55 m. E. M 8	22029-5-20336-L
20	33	16,5	110	25 x 55 m. E. M 8	22029-5-20336-R
20	53	26,5	125	¾" x 55 m. E. M 8	22029-5-20534-R
20	53	26,5	125	20 x 55 m. E. M 8	22029-5-20535-L
20	53	26,5	125	20 x 55 m. E. M 8	22029-5-20535-R
20	53	26,5	125	25 x 55 m. E. M 8	22029-5-20536-L
20	53	26,5	125	25 x 55 m. E. M 8	22029-5-20536-R
25	53	26,5	125	25 x 55 m. E. M 8	22029-5-25536-R

Technical details

With two staggered **reversible** TC tips each, with alternate shear angle and one reversible TC plunge tip, 4-sided. Upper and lower tips can be interchanged with each other. For mechanical feed.

Application

For high quality finish on double-sided laminated panels and for machining solid wood.

Spare parts / Accessories		Part-No.
Reversible TC tip	17,5 x 7 x 1,5 mm, HW 02	72124-6-01750-0
Reversible TC tip	29,5 x 7 x 1,5 mm, HW 02	72124-6-02950-0
Reversible TC tip	17,5 x 7 x 1,5 mm, HW 01	72124-6-01751-0
Reversible TC tip	29,5 x 7 x 1,5 mm, HW 01	72124-6-02951-0
Reversible TC tip	9 x 9 x 1,5 mm	72005-6-00902-0
Torx clamping screw	M 3 x 4, T 9	39081-0-03040-R
Torx key	T 9, with handle	39077-0-03009-2

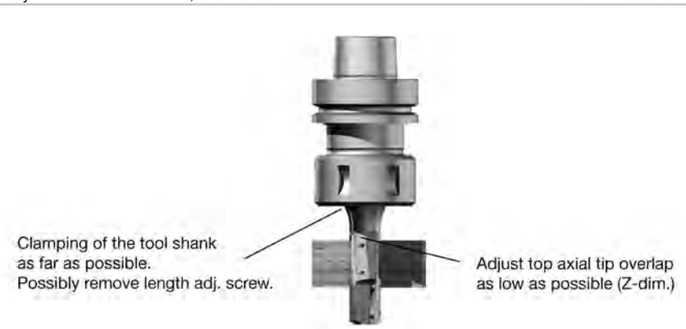

R. Milling Cutter & C. Cutters

Router Cutters w. reversible TC tips Z2

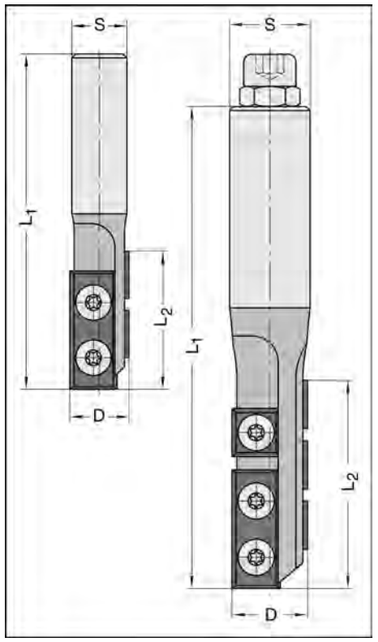

22010 / 22020 with TCT plunge tip

D mm	L_2 mm	L_1 mm	Shank mm	Part-No.
16	34	85	14 x 40	22010-5-16030-R
16*	45	95	14 x 40	22010-5-16040-R
20	50	120	20 x 50 m. E. M 8	22020-5-20505-R

* Use No. 22005 (page 4.2), if axial plunge cutting is not required.

Technical details
With one reversible TC tip 30 mm and, depending on cutting length, 2, 3 or 4 staggered 12 mm reversible TC tips. With TCT centre tip for plunge cutting. Right-hand rotation. For manual and mechanical feed.

Application
For pre-cutting and cut-out operations in solid wood, various kinds of wood composites and boards on stationary routers and CNC machines.

Spare parts / Accessories		Part-No.
Reversible TC tip	30 x 12 x 1,5 mm, 4-sided, HW 02	72014-6-03000-0
Reversible TC tip	12 x 12 x 1,5 mm, 4-sided, HW 02	72014-6-01201-0
Torx clamping screw	M 4 x 5,9, extra-large head, T15	39076-0-04000-R
Torx key	T15, with handle	39077-0-04015-2

For spare tips in different TC grades see page 7.4

Roughing Cutter w. reversible TC tips Z1

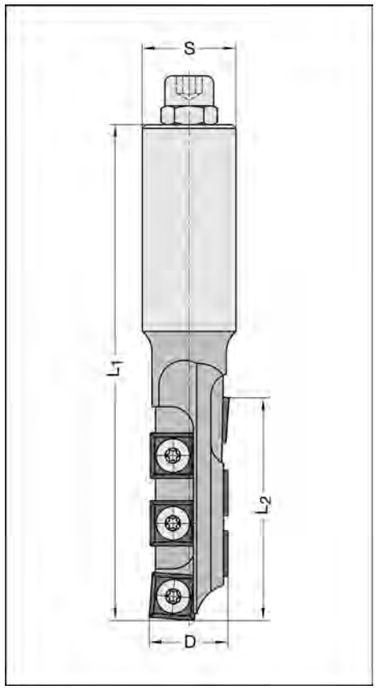

22026

D mm	L_2 mm	L_1 mm	Shank mm	Part-No.
22	60	131	25 x 55 m. E. M 8	22026-5-22606-R

Technical details
With four or six staggered reversible TC tips, TC grade HW 02. Upper and lower tips with shear angle each. Applicable for ramp plunge cutting. Right-hand rotation. For mechanical feed.

Application
For increased chip removal rates for pre-cutting and aperture operations in solid wood and all kinds of wood composites on stationary routers and CNC machines. For high quality finish, even on double-sided laminated materials.

Spare parts / Accessories		Part-No.
Reversible TC tip	12 x 12 x 1,5 mm, 4-sided, HW 02	72014-6-01201-0
Reversible TC tip	12 x 12 x 1,5 mm, 4-sided, HW 01	72014-6-01200-F
Torx clamping screw	M 4 x 5,9, extra large head, T15	39076-0-04000-R
Torx key	T15, with handle	39077-0-04015-2

HW 02 = standard grade
HW 01 = for MDF and high abrasive materials

Roughing Cutters w. reversible TC tips Z1

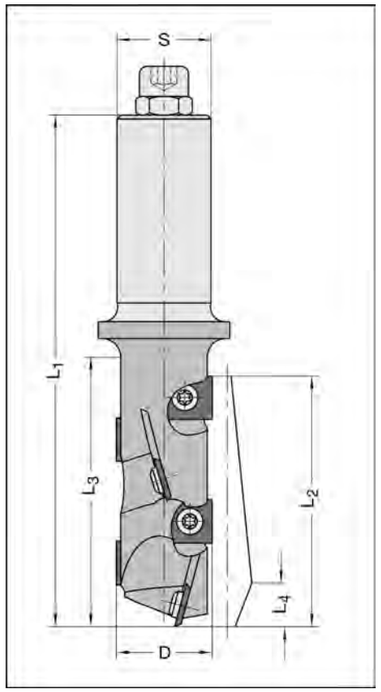

22027

D mm	L_2 mm	L_4 mm	L_3 mm	L_1 mm	Shank mm	Part-No.
25	66	11	78	138	20 x 55 m. E. M 8	22027-5-25665-R
25	66	11	78	138	25 x 55 m. E. M 8	22027-5-25666-R

Technical details
With four or six helically positioned reversible TC tips, TC grade HW 02. All TC tips with shear angle. Not applicable for plunge cutting. Right-hand rotation. For mechanical feed.

Application
For increased chip removal rates for pre-cutting and aperture operations in solid wood and all kinds of wood composites on stationary routers and CNC machines. For high-quality finish, even on double-sided laminated materials.

Spare parts / Accessories		Part-No.
Reversible TC tip	12 x 12 x 1,5 mm, 4-sided, HW 02	72014-6-01201-0
Reversible TC tip	12 x 12 x 1,5 mm, 4-sided, HW 01	72014-6-01200-F
Torx clamping screw	M 4 x 5, T15	39081-0-04050-R
Torx key	T15, with handle	39077-0-04015-2

HW 02 = standard grade
HW 01 = for MDF and high abrasive materials

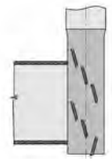

R. Milling Cutter & C. Cutters

FOURCUT Roughing Cutters TC Z2

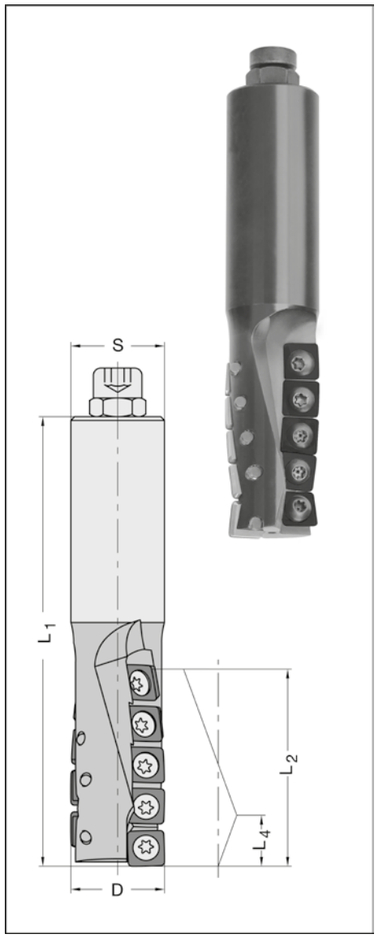

20330

D mm	L_2 mm	L_4 mm	L_1 mm	AS	Shank mm	Part-No.
25	54	13,9	120	10	20 x 55 m. E. M 8	20330-5-25505-R
25	54	13,9	120	10	25 x 55 m. E. M 8	20330-5-25506-R

AS = number of cutting edges (tips)
The last 4 or 5 mm on shank side with single cutting edge (Z1).

Technical details
Sturdy tool body with 4-sided reversible solid TC tips in special FourCut design, helically positioned. High precision and secure tip fixing by special screws with centering collar.
Mechanical feed. Right-hand rotation.

Application
For jointing and panel sizing of wood- and board materials with different configuration on CNC machines. Helically positioned tips for high chip removal and good chip flow. Applicable for ramp plunge cutting.
Combined use of solid TC and PCD tips possible (page 5.24).

Application data:
R.P.M. = 18 000 - 24 000
v_f = 8 - 15 m/min.

Spare parts / Accessories		Part-No.
Reversible TC tip	9,8 x 9,8 x 2,0 mm, 4-sided, convex design	72014-6-09800-0
Torx-srew	M 4 x 6, T15, w. centering collar, for D=20 mm	39081-0-04006-R
Torx-srew	M 4 x 7, T15, w. centering collar, for D=25 mm	39081-0-04070-R
Torx key	T15, with handle	39077-0-04015-2

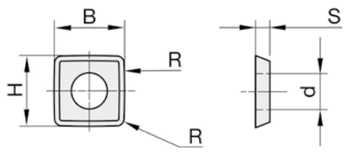

Spiral Router Cutters w. reversible TC tips Z2

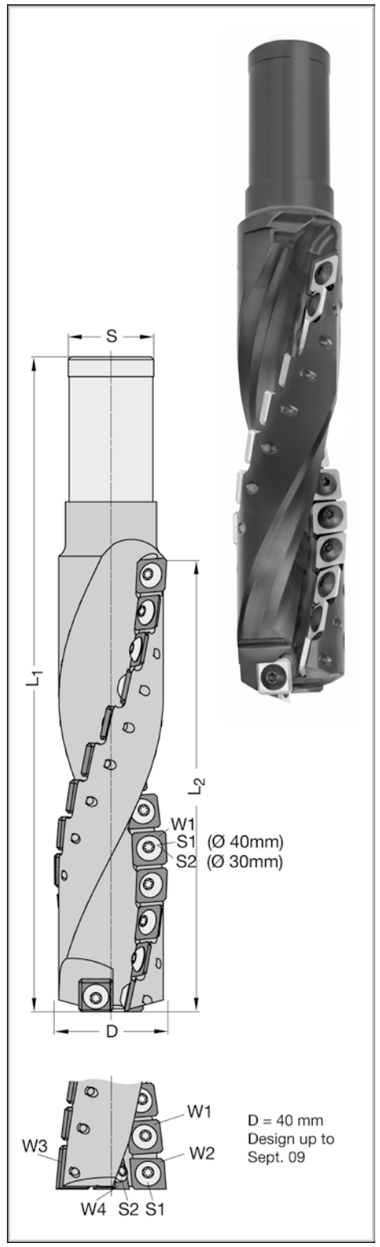

20290 shank 30 / 29,8 mm for automatic joinery machines

D mm	L_2 mm	L_1 mm	AS	Shank mm	Part-No.
30	119	195	19	30/29,4	20290-5-30000-R
40	160	235	26	30/29,4	20290-5-40160-R

Technical details
Helically positioned reversible TC tips for smooth running. All TC tips with shear angle. Right-hand rotation.
For mechanical feed.

Application
For milling of drill holes and profiled shapes, as well as for tenon- and special connections on automatic joinery machines in the timber-frame construction.
Applicable for all kind of wood (soft- hard- and glued wood). Also usable on special machines for block house and prefabricated house industry. Further dimensions available on request.

R.P.M. max = 15 000 (D = 30 mm)
R.P.M. max = 12 000 (D = 40 mm)

Spare parts / Accessories		Part-No.
Reversible TC tip	W 1, 12 x 12 x 1,5 mm, bevel, number of tips D = 30/40 mm: 19/26	72015-6-01245-R
Reversible TC tip	W 2, 12 (11,1) x 12 x 1,5 mm, number of tips D = 30/40 mm: -/1	72015-6-01145-R
Reversible TC tip	W 3, 17 x 12 x 1,5 mm, number of tips D = 30/40 mm: -/1	72015-6-01745-R
Reversible TC tip	W 4, 9 x 12 x 1,5 mm, number of tips D = 30/40 mm: -/2	72010-6-00900-0
Reversible TC tip	W 5, 12 x 12 x 1,5 mm, number of tips D = 30/40 mm: 2/-	72014-6-01201-0
Torx clamping screw	M 4 x 5,9 extra-large-head, T15 (S 1)	39076-0-04000-R
Torx clamping screw	M 4 x 5, T15 (S 2)	39081-0-04050-R
Torx key	T15, with handle	39077-0-04015-2

For D = 30 mm and D = 40 mm up from Sept. 09, only tip W1 is required. (26 pcs for D = 40 mm and 19 pcs for D = 30 mm).

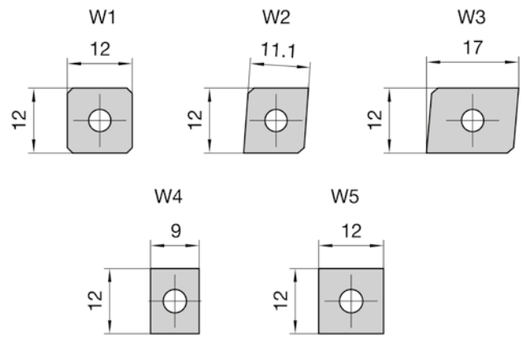

R. Milling Cutter & C. Cutters

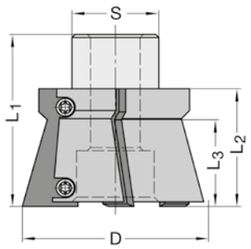

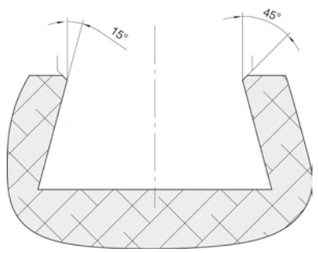

22730 shank 28 / 16 mm for automatic joinery machines

D mm	L_2 mm	L_3 mm	L_1 mm	Shank mm	Form	Part-No.
60	38	28	55,5	28	A	22730-5-60001-L
60	38	28	55,5	28	A, wave ground	22731-5-60001-L
60	38	28	55,5	28	A, chip breakers	22732-5-60001-L
65	48	38	65,5	28	A	22730-5-65001-L

Technical details
Tool body with three straight interchangeable TC profile knives in HW 04 carbide grade.
Face screw fixing. Constant cutting circle diameter.
Complete with setting plate for easy knife assembling and knife changing.
Left-hand rotation. For mechanical feed.

Application
For milling of sliding dovetail joints on automatic joinery machines in the timber-frame construction.
Applicable for all kind of wood (soft- hard- and glued wood). Also usable on special machines for block house and prefabricated house industry. Further dimensions available on request.

R.P.M. max = 9 000

Spare parts / Accessories		Part-No.
Interchangeable TC tip	38 x 16,7 x 2 mm, for L_2/L_3=38/28 mm standard design	72730-6-38000-L
Interchangeable TC tip	38 x 16,7 x 2 mm, knife no. 1, for L_2/L_3=38/28 mm wave ground	72731-6-38001-L
Interchangeable TC tip	38 x 16,7 x 2 mm, knife no. 2, for L_2/L_3=38/28 mm wave ground	72731-6-38002-L
Interchangeable TC tip	38 x 16,7 x 2 mm, knife no. 3, for L_2/L_3=38/28 mm wave ground	72731-6-38003-L
Interchangeable TC tip	38 x 16,7 x 2 mm, knive set, for L_2/L_3=38/28 mm 3-part design, wave ground	72731-6-38000-L
Interchangeable TC tip	38 x 16,7 x 2 mm, knife no. 1, for L_2/L_3=38/28 mm chip breaking grooves	72732-6-38001-L
Interchangeable TC tip	38 x 16,7 x 2 mm, knife no. 2, for L_2/L_3=38/28 mm chip breaking grooves	72732-6-38002-L
Interchangeable TC tip	38 x 16,7 x 2 mm, knife no. 3, for L_2/L_3=38/28 mm chip breaking grooves	72732-6-38003-L
Interchangeable TC tip	38 x 16,7 x 2 mm, knive set, for L_2/L_3=38/28 mm 3-part design, chip breaking grooves	72732-6-38000-L
Interchangeable TC tip	48 x 16 x 2 mm, for L_2/L_3=48/38 mm standard design	72730-6-48000-L
Setting plate	D 66 mm, for form A	39730-0-66000-0
Torx clamping screw	M 4 x 5,5 T15	39080-0-40552-R
Torx key	T15, with handle	39077-0-04015-2

Form A

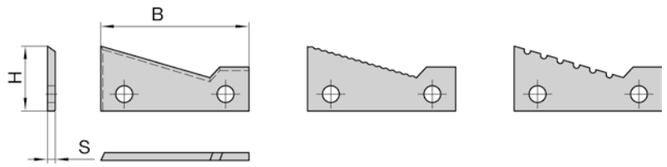

Form B

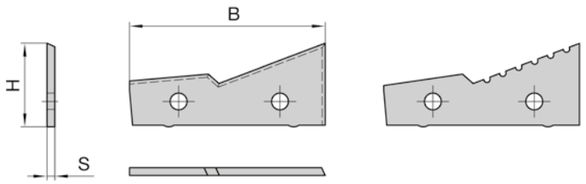

Dovetail cutters w. interchangeable TC tips Z3

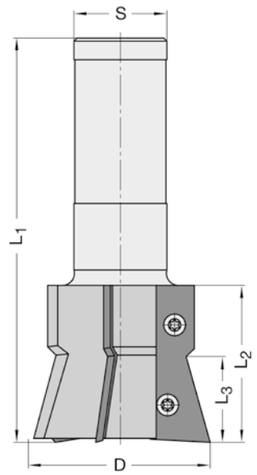

22730 shank 30 / 29,8 mm for automatic joinery machines

D mm	L_2 mm	L_3 mm	L_1 mm	Shank mm	Form	Part-No.
60	50	28	131	30	B	22730-5-60002-R
60	50	28	131	30	B, chip breakers	22732-5-60002-R

Technical details
Tool body with three straight interchangeable TC profile knives in HW 04 carbide grade.
Face screw fixing. Constant cutting circle diameter.
Complete with setting plate for easy knife assembling and knife changing.
Right-hand rotation. For mechanical feed.

Application
For milling of sliding dovetail joints on automatic joinery machines in the timber-frame construction.
Applicable for all kind of wood (soft- hard- and glued wood). Also usable on special machines for block house and prefabricated house industry. Further dimensions available on request.

R.P.M. max. = 12 000

Spare parts / Accessories		Part-No.
Interchangeable TC tip	50 x 21,5 x 2 mm, for L_2/L_3=50/28 mm standard design	72730-6-50000-R
Interchangeable TC tip	50 x 21,5 x 2 mm, knife no.1, for L_2/L_3=50/28 mm chip breaking grooves	72732-6-50001-R
Interchangeable TC tip	50 x 21,5 x 2 mm, knife no.2, for L_2/L_3=50/28 mm chip breaking grooves	72732-6-50002-R
Interchangeable TC tip	50 x 21,5 x 2 mm, knife no.3, for L_2/L_3=50/28 mm chip breaking grooves	72732-6-50003-R
Interchangeable TC tip	50 x 21,5 x 2 mm, knive set, for L_2/L_3=50/28 mm 3-part design, chip breaking grooves	72732-6-50000-R
Setting plate	D 62 mm, for form B	39730-0-62000-0
Torx clamping screw	M 4 x 5,9 mm, extra-large-head, T15	39076-0-04000-R
Torx key	T15, with handle	39077-0-04015-2

Example of profile (1:1)

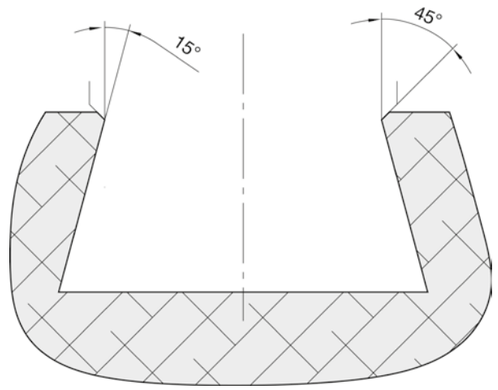

R. Milling Cutter & C. Cutters

NOVITEC Roughing Cutters

with interch. TC cutting pins GBM

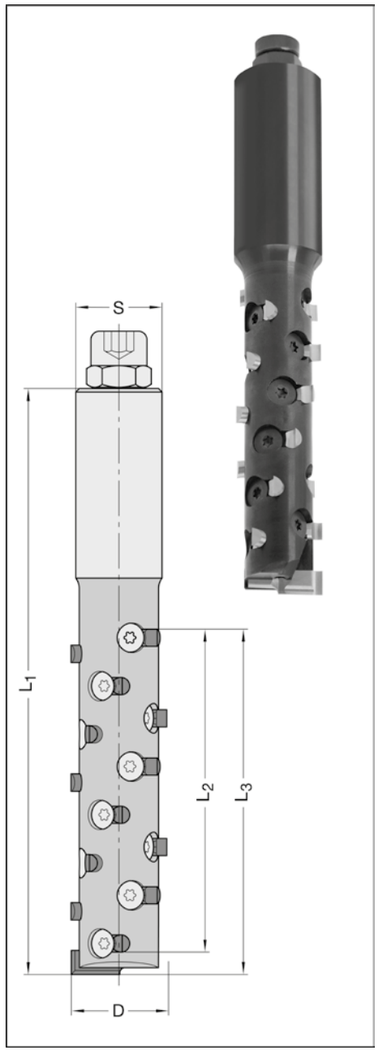

20300

D mm	L_2/L_3 mm	L_1 mm	Z/AS	Shank mm	Part-No.
¾"	56/62	119	3/12	¾" x 50 m. E. M 8	20300-5-19564-R
20	42/48	118	3/9	20 x 55 m. E. M 8	20300-5-20425-R
20	56/62	132	3/12	20 x 55 m. E. M 8	20300-5-20565-R
24	42/48	118	3/9	25 x 55 m. E. M 8	20300-5-24426-R
24	56/62	126	3/12	25 x 55 m. E. M 8	20300-5-24566-R
24	56/62	154	3/12	MK 2/M 30 x 1,5	20300-5-24567-R
24	70/76	140	3/15	25 x 55 m. E. M 8	20300-5-24706-R
24	83/90	153	3/18	25 x 55 m. E. M 8	20300-5-24836-R

Z = series of cutting pins, AS = number of cutting pins

Technical details
Round tool body with 3 series of cutting pins. Depending on cutting length with altogether 9 to 18 interchangeable TC cutting pins and one TC tip for plunge cutting. Standard version with straight cutting pins. Optional with shear angle cutting pins, up-cut or down-cut, to be inserted at any height. Helically positioned cutting pins ensure high quality of cut. Can be reground several times [1].
Fast exchange of cutting pins without adjustment through the patented pin clamping system. For mechanical feed.

Application
For severing, copying, panel sizing, rebating, aperture works, etc. of various kinds of wood composites and other composite materials on CNC machines. Reduced cutting pressure because of high chip removal rates. The compact tool body ensures vibration-free running. The interchangeable plunge cutting tip also permits ramp plunge cutting.

R.P.M. max. = 24 000

Advantages:
- superior chip removal rates
- minimum cutting pressure
- reduced risk of breakage
- interchangeable TC cutting pins
- several times regrindable [1]
- economical machining of thick materials

Important:
When working on relatively thin materials with cutters of a considerably longer cutting length, operate as close to shank as possible in order to avoid breaking of tool. If possible, try to use cutters with a shorter cutting length.

For cutting pins and plunge cutting knives see page 7.15.

Spare parts / Accessories		Part-No.
Torx countersunk screw	M 3 x 5,5, T 9, for D= 16 - 20 mm	39085-0-03055-R
Torx countersunk screw	M 4 x 6,7, T15 for D= up from 21 mm	39085-0-04067-R
Torx countersunk screw	M 3 x 5,5, T 9, for plunge tip D= 16 mm	39084-0-03055-R
Torx countersunk screw	M 3 x 8, T 9, for plunge tips D= 18 - 20 mm	39084-0-03089-R
Torx countersunk screw	M 3 x 8, T15, for plunge tips D= up from 21 mm	39084-0-03080-R
Torx key	T 9, with handle	39077-0-03009-2
Torx key	T15, with handle	39077-0-04015-2

*On every change of the cutting pins, ensure the good condition of the countersunk screws and if necessary replace it.

[1] Special cutter body for **economical resharpening** of cutting pins and plunge tips (ø 16-24 mm) see page 7.15.

Examples of application:

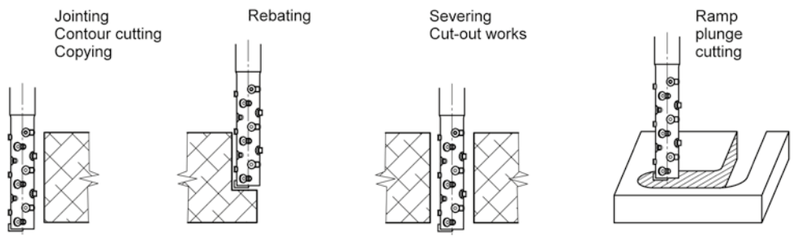

Helical Cutterhead w. rev. TC tips Z2+2+V2

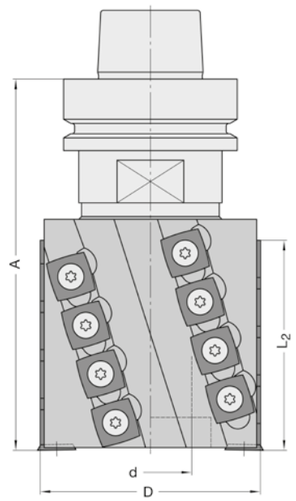

62300

D mm	L_2 mm	d mm	KN mm	Z/AS	A mm	Part-No.
80	80 / 86	30	8 x 2	2/18	-	62300-5-08080-R
Completely assembled on arbor HSK-F 63						
80	80 / 86	30	8 x 2	2/18	141,5	62300-5-08063-R

Technical details
Tool body made of high-quality, light metal with hard-anodized surface and **18 convex ground** reversible TC tips. Helically positioned tips with negative spiral, divided into cutting series of four.
With two reversible TC spurs on bottom. Recessed on one side to take the end retaining screw.
Supplied complete with spacer 50 x 10 mm.
Right-hand rotation. For mechanical feed.

Further arbors 30 x 80 mm see page 6.8.

Application
For trimming, jointing, rebating, hogging and copying operations of solid wood as well as of composite wood for u on CNC machines. Also applicable for high stock removal rates.

Surface qualities:
Machining with grain in finish quality (sensory minimum "waves" to notice) - without marks / lines.
Machining against grain in finisch quality - with minimum visible marks /lines.

R.P.M. max. = 18 000

Special advantages:
- High chipping performance and better chip removal through helically positioned cutting edges.
- Reduced cutting force thanks to divided cutting.
- Optimum division of cut and shear angles for high feed rates.

Spare parts / Accessories		Part-No.
Reversible TC tip	13,8 x 13,8 x 2,5 mm convex design, R= 40 mm, up from 7/2018 model	72023-6-01380-0
Reversible TC tip	15 x 15 x 2,5 mm convex design, R= 50 mm, up to 6/2018 model	72023-6-01500-0
Reversible TC spur	14 x 14 x 2,0 mm, (special design)	72020-6-01420-0
Spacer	50 x 10,0 x 30 mm, DKN	39540-0-10000-1
Torx countersunk screw	M 5 x 15,5, T15 (for reversible TC tip)	39086-0-05015-R
Torx countersunk screw	M 5 x 12, T15 (for reversible TC spur)	39085-0-05011-R
Torx key	T15, with handle	39077-0-04015-2

R. Milling Cutter & C. Cutters

Helical Cutterhead w. rev. TC tips Z2+V4

62300-5

D mm	L_2 mm	d mm	DKN mm	Z/AS	A mm	Part-No.
100	100	30	8 x 2	2/24	-	62300-5-10011-R
Completely assembled on arbor HSK-F 63						
100	100	30	8 x 2	2/24	149	62300-5-10063-R

Technical details
Tool body of high-quality, light metal with hard-anodized surface and convex ground reversible TC tips. Helical positioned tips on 4 wings **with alternative shear angle** for perfect surface. With two each top and bottom TC spurs. Bore with recess on one side to take the end retaining screw.
Right-hand rotation. For mechanical feed.

Appropriate arbors 30 x 80 mm see page 6.8.
Further dimensions on inquiry.

Application
For trimming, jointing, rebating, planing and copying for solid wood on CNC machines.

R.P.M. max. = 15 000

Special advantages:
- Perfect cut of narrow edges e.g. on solid wood bars
- High chipping performance and excellent chip removal
- Optimised division of cut for high feed rates
- Alternative shear angle protect the spindle bearings and prevent the workpiece against moving.

Spare parts / Accessories		Part-No.
Reversible TC tip	15 x 15 x 2,5 mm, R100 mm, convex design	72023-6-01515-0
Reversible TC spur	22 x 19 x 2 mm	72019-6-01900-0
Torx countersunk screw	M 5 x 12, T20, for reversible TC tip (raker tip)	39085-0-05012-R
Torx countersunk screw	M 6 x 10, T20, for TC spur	39085-0-06010-R
Torx key	T20, with handle	39077-0-00020-2

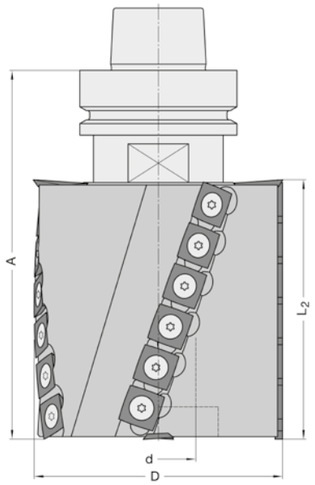

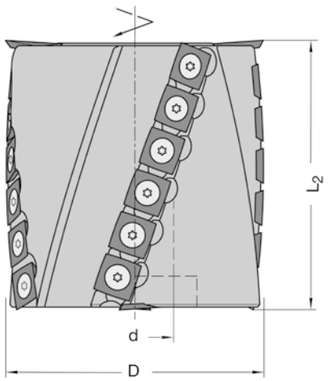

Also applicable for rebating

Jointing/Rebating Cutterheads w. rev. TC tips

62160

D mm	L_2 mm	d mm	KN mm	Z/V	Part-No.
125	30	30	8 x 2	4/4 W	62160-5-12531-1
125	50	30	8 x 2	4/4 W	62160-5-12551-1
125	50	20	6 x 1,5	4/4 W	62160-5-12552-1
Completely assembled on arbor HSK-F 63, A= 96 mm					
125	30	30	8 x 2	4/4 W	62160-5-03063-R
125	50	30	8 x 2	4/4 W	62160-5-05063-R
125	50	20	6 x 1,5	4/4 W	62160-5-05263-R
Completely assembled on arbor HSK-F 63, A= 111 mm					
125	30	30	8 x 2	4/4 W	62160-5-03163-R
125	50	30	8 x 2	4/4 W	62160-5-05163-R
125	50	20	6 x 1,5	4/4 W	62160-5-05363-R

W = alternate shear angle
Further appropriate arbors No. 21089 (on page 6.8, HSK-F 63) and No. 21080 (on page 6.13, cylindrical shank).

Technical details
Tool body made of high-quality, light metal. With four reversible TC tips with alternate shear angle, with two upper and lower reversible TC spurs each. Bore recessed either on one side (L_2 = 30 mm) or on both sides (L_2 = 50 mm) to take the double-threaded end retaining screw.

"Completely assembled on arbor" includes cutterhead, arbor and belonging spacers.
A= 96 mm: arbor with L_2= 40 mm
A= 111 mm: arbor with L_2= 55 mm

Application
For all kinds of rebating operations, either on spindle moulders (d = 30 mm) or stationary routers or CNC machines (d = 20 mm or 30 mm). Can be used for either right-hand or left-hand rotation.
For manual or mechanical feed.

R.P.M. max. = 10 600

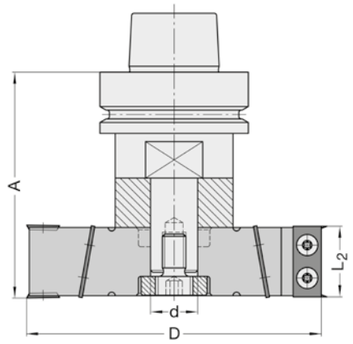

No. 62160 Z = 4 with alternate shear cut

Spare parts / Accessories		Part-No.
Reversible TC tip	30 x 12 x 1,5 mm, 2-sided, HW 02	72010-6-03001-0
Reversible TC tip	50 x 12 x 1,5 mm, 2-sided, HW 02	72010-6-05001-0
Reversible TC spur	14 x 14 x 2,0 mm	72020-6-01414-1
Torx clamping screw	M 4 x 5,9, extra-large head, T15	39076-0-04000-R
Torx countersunk screw	M 5 x 7, T15, for spur	39085-0-05007-R
Torx key	T15, with handle	39077-0-04015-2

d mm	Cutter L_2 mm	Arbor L_2 mm	Minimum thickness of spacers mm
20 KN	30	40	22
	50	40	2
	50	55	17
30 KN	30	40	24
	50	40	4
	50	55	19

For spare tips in different TC grades see page 7.3 and 7.4.

R. Milling Cutter & C. Cutters

Grooving/Surfacing Cutters w. rev. TC tips Z2+2

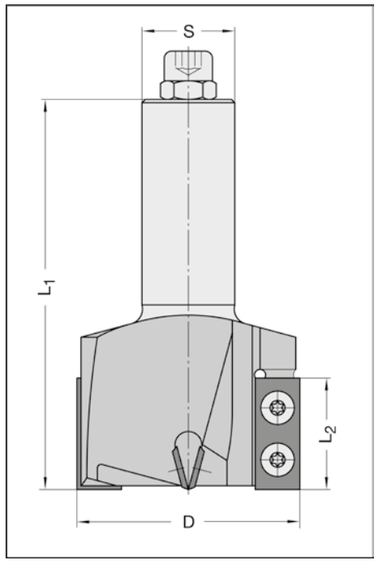

22045

D mm	L_2 mm	L_1 mm	Shank mm	Part-No.
40	30	90	¾" x 55 m. E. M 8	22045-5-40304-R
40	30	90	20 x 55 m. E. M 8	22045-5-40305-R
40	30	90	25 x 55 m. E. M 8	22045-5-40306-R
60	30	105	20 x 55 m. E. M 8	22045-5-60305-R
60	30	105	25 x 55 m. E. M 8	22045-5-60306-R
80	12	78	25 x 55 m. E. M 8	22045-5-80126-R

Technical details
With two straight reversible TC tips, cutting on periphery and two reversible TC centre tips for plunge cutting, with shear angle. Large gullet area for optimum chip removal while plunging.
Right-hand rotation. For mechanical feed.

Application
For axial plunging operations, grooving up from 35 mm grooving width, rebating, jointing and surfacing in solid wood and various kinds of wood composites on stationary routers or CNC machines.
For **axial** plunge cutting operations exceeding a depth of 10 mm, spindle speed should be reduced to **12000 R.P.M.**

R.P.M. max. = 18 000 (D= 40 / 60 mm)
R.P.M. max. = 13 500 (D= 80 mm)

Spare parts / Accessories		Part-No.
Interch. TC tip	12 x 12 x 1,5 mm, 4-sided, HW 02, for D=80 mm periphery tip and 35/40 mm plunge tip	72014-6-01201-0
Reversible TC tip	20 x 12 x 1,5 mm, 2-sided, HW 02, for D=60 mm plunge tip	72010-6-02001-0
Reversible TC tip	30 x 12 x 1,5 mm, 2-sided, HW 02, for D=80 mm plunge tip	72010-6-03001-0
Reversible TC tip	30 x 12 x 1,5 mm, 4-sided, HW 02, f. D = 35/40/60 mm periphery tip	72014-6-03000-0
Torx clamping screw	M 4 x 5,9, extra large head, T15	39076-0-04000-R
Torx key	T15, with handle	39077-0-04015-2

For spare tips in different TC grades on page 7.3 and 7.4.

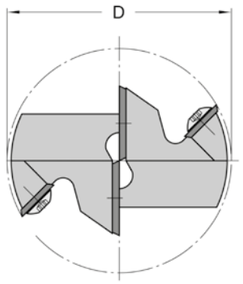

Examples of application

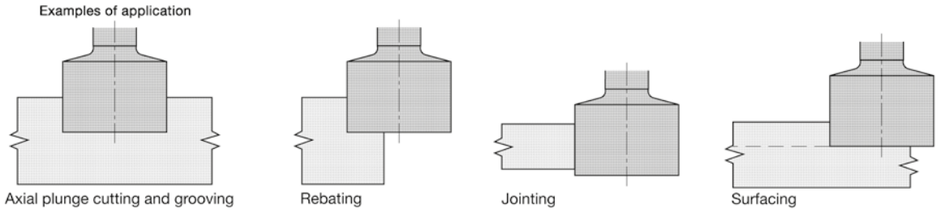

Jointing/Rebating Cutter w. rev. TC tips Z2+V2

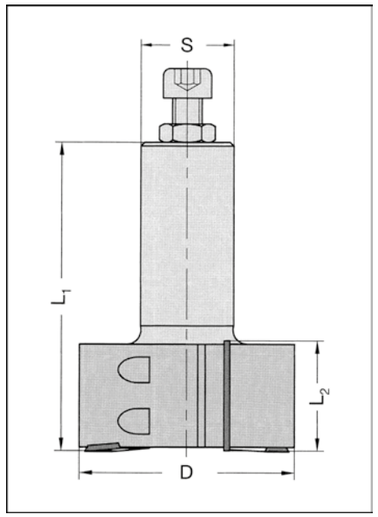

22060

D mm	L_2 mm	L_1 mm	Shank mm	Part-No.
60	50	104	25 x 55 m. E. M 8	22060-5-60506-R

Technical details
Tempered tool body with high resistance to wear, with two straight reversible TC tips.
With two additional reversible TC spurs on bottom.
Right-hand rotation. For mechanical and manual feed.

Application
For jointing and rebating on stationary routers and CNC machines.

R.P.M. max. 18 000

Spare parts / Accessories		Part-No.
Reversible TC tip	30 x 12 x 1,5 mm, 2-sided, HW 02	72010-6-03001-0
Reversible TC tip	50 x 12 x 1,5 mm, 2-sided, HW 02	72010-6-05001-0
Reversible TC spur	14 x 14 x 2,0 mm	72020-6-01414-1
Clamping screw	M 6 x 12, ISO 4028	39266-0-06012-R
Torx countersunk screw	M 5 x 7, for spur	39085-0-05007-R
Clamping wedge	30 mm	39100-0-03001-0
Clamping wedge	50 mm	39100-0-05001-0
Key with T-handle	SW 3	39140-0-00302-0

For spare tips in different TC grades see page 7.3.

Surfacing Cutters w. rev. TC tips Z3

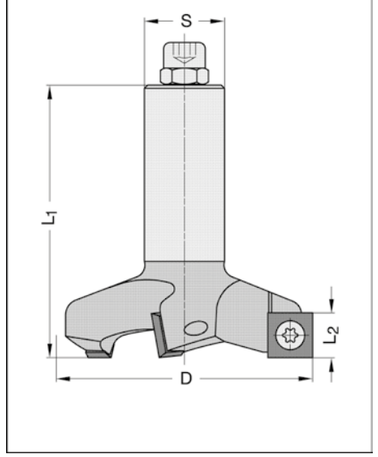

22525

D mm	L_2 mm	L_1 mm	Shank mm	Part-No.
80	14	85	20 x 55 m. E. M 8	22525-5-80005-R
80	14	85	25 x 55 m. E. M 8	22525-5-80006-R

Technical details
Tool body with three reversible TC tips, 4-sided, **with shear cut.** Flush countersunk screw for improved chip flow. Inlaying and rebating work with perfect edge quality due to shear cut. Right-hand rotation. For mechanical feed.

Application
For surfacing of spoilboards on CNC machines, square trimming of wide edge bands and for wide cut-outs of little cutting depth.

R.P.M. max 12 000

Spare parts / Accessories		Part-No.
Reversible TC spur	14 x 14 x 2 mm, 4-sided, HW 29	72020-6-01414-1
Torx countersunk screw	M 5 x 7, T15	39085-0-05007-R
Torx key	T15, with handle	39077-0-04015-2

R. Milling Cutter & C. Cutters

4Cut Surfacing Cutters w. rev. TC tips

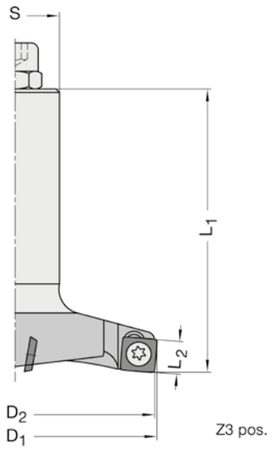

20525 Z3 positive

D_1/D_2 mm	L_2 mm	L_1 mm	Shank mm	Part-No.
82/80	8	80	25 x 55 m. E. M 8	20525-5-80006-R
122/120	8	85	25 x 55 m. E. M 8	20525-5-12006-R

Technical details
Tool body of high-quality steel with three rev. solid TC tips, each 4-sided in special FourCut design, with corner radius to reduce risk of breakage and to improve life time. With shear angle.
Polished face. Right-hand rotation. For mechanical feed.

Application
Positive shear angle. for surfacing of working tables of all common board materials and solid wood on CNC machines. Also applicable for Plastomeres and Duromeres.

Application data:
R.P.M. max. = 10 000
v_f = 10 - 20 m/min.

Solid TC tips exchangeable against PCD tips, No. 17525-9 (page 5.25), No. 72014-9 (page 7.2).

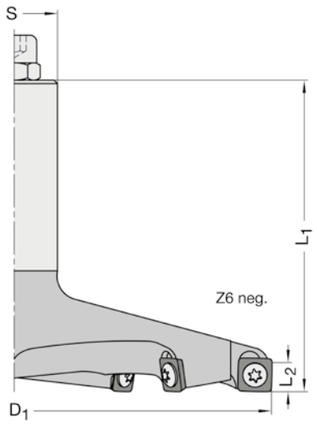

20525 Z6 negative

D_1 mm	L_2 mm	L_1 mm	Shank mm	Part-No.
150	8	90	25 x 55 m. E. M 8	20525-5-15000-R

Technical details
Tool body of high-quality steel with six rev. solid TC tips, each 4-sided in special FourCut design, with corner radius to reduce risk of breakage and to improve life time. With shear angle.
Polished face. Right-hand rotation. For mechanical feed.

Application
Negative shear angle. Especially for surfacing of spoil boards on nesting CNC machine centres.

Application data:
R.P.M. max. = 9 000
v_f = 12 - 30 m/min.

Solid TC tips exchangeable against PCD tips, No. 17525-9 (page 5.25), No. 72014-9 (page 7.2).

Spare parts / Accessories		Part-No.
Reversible TC tip	9,8 x 9,8 x 2,0 mm, 4-sided, convex design	72014-6-09800-0
Torx-srew	M 4 x 7, T15, w. centring collar, spec. design	39081-0-04070-R
Torx key	T15, with handle	39077-0-04015-2

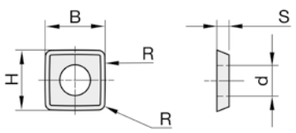

Adjustable Grooving Cutters w. rev. TC tips

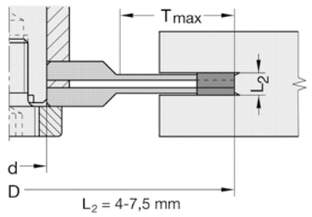

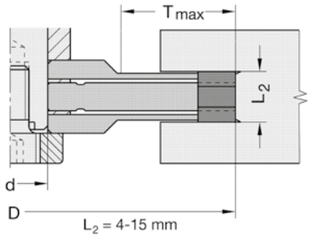

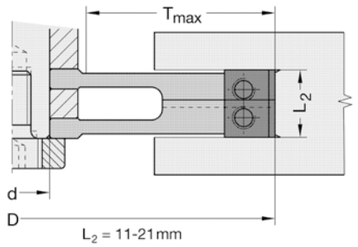

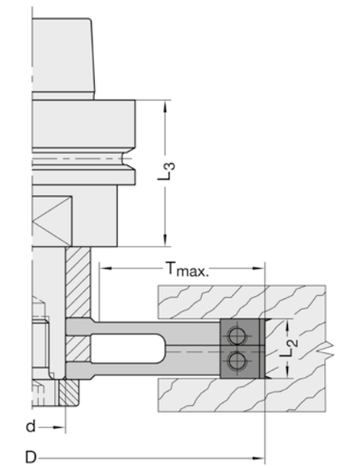

60200

D mm	L_2 mm	d mm	T_{max} mm	KN mm	Z/V	Part-No.
125	4-7,5	20	25	6 x 1,5	Z2+2-V4	60200-5-12501-R
125	4-15	20	25	6 x 1,5	Z2+2-V4	60200-5-12502-R
140	11-21	20	43	6 x 1,5	Z4-V4	60200-5-14001-R
Intermediate cutter (for L_2 = 4 - 15 mm)						
125	7,5	20	-	6 x 1,5	Z2	60210-5-12575-R

All cutters: **d_{max} = 30 mm**

Technical details
Two resp. three-part steel tool body, adjustable by spacers.
L_2 = 4 - 7,5 mm with two upper and lower reversible TC tips each per cutter unit, 4-sided and with two reversible TC spurs.
L_2 = 11 - 21 mm with two reversible TC tips and two reversible TC spurs per cutter unit.
For manual and mechanical feed.

Application
For all kinds of grooving and rebating operations. To be used with arbors d = 20 mm, No. 21080, cyl. shank (page 6.14) and No. 21086, HSK-F63 (page 6.9). Spacer sets on page 7.27.

R.P.M. max. = 9 500 min^{-1}

Extra costs for:
- enlarging bore diameter to 30 mm
- adapt keyway 8 x 2 mm (for d = 30 mm)
see page 7.31

60200 assembled on arbor

D mm	L_2 mm	T_{max} mm	L_3 mm	Shank mm	Part-No.
140	11-21	45	45	SK 30	60200-5-00002-R
140	11-21	45	-	25 x 55 m. E. M 8	60200-5-00006-R
140	11-21	45	45	HSK-F 63	60200-5-00063-R

Technical details
Two-part steel tool body, adjustable by spacers. Feather key provide positive drive. Assembled on arbor. Either for right-hand or left-hand rotation. For mechanical feed.

Application
For all kind of grooving and rebating operations on CNC-machines. Also for cutting grooves for automatic floor seals in doors on CNC-machines.

R.P.M. max. = 9 500

Spare parts / Accessories		Part-No.
Reversible TC tip	18 x 18 x 2,0 mm, HW 02, for L_2 = 4 mm	72025-6-00010-0
Reversible TC tip	7,5 x12 x 1,5 mm, HW 02, for L_2 = 7,5 mm	72010-6-00751-0
Raker tip	10,5 x 12 x 1,5 mm, HW 02, for L_2 = 11-21 mm	72050-6-25000-0
Reversible TC tip	20 x 12 x 1,5 mm, 2-sided, HW 02, for L_2 = 22-39 mm	72010-6-02001-0
Reversible TC spur	14 x 14 x 1,2 mm, for L_2 = 3,97 - 7,5 mm	72020-6-01412-0
Reversible TC spur	14 x 14 x 2,0 mm, up from L_2 = 8 mm	72020-6-01414-10
Nut	M 4 x 0,5 x 1,6 mm, D= 10 mm, for spur 1,2 mm	39153-0-10016-0
Nut	M 4 x 0,5 x 1,6 mm, D= 12 mm, for tip 2,0 mm	39153-0-12016-0
Nut	M 4 x 0,5 x 2,2 mm (for raker 18 x 18 x 2 mm)	39153-0-12022-0
Torx countersunk screw	M 4 x 0,5 x 3,2 mm, T 9	39084-0-04032-R
Torx clamping screw	M 4 x 5,9, extra-large head, T15	39076-0-04000-R
Allen screw	M 5 x 8, ISO 4028, for wedge 7,5 mm	39266-0-05008-R
Clamping screw	M 6 x 12, ISO 4028, for wedge 10,5 mm	39266-0-06012-R
Torx countersunk screw	M 5 x 7, T15, for spur 2,0 mm	39085-0-05007-R
Torx key	T 9, with handle	39077-0-03009-2
Torx key	T15, with handle	39077-0-04015-2
Allen key	SW 2,5 (for M 5) hexagon	39120-0-02500-0
Allen key	SW 3 (for M 6) hexagon	39120-0-03000-0
Clamping wedge	7,5 mm, for tip 7,5 x 12 mm	39100-0-00750-0
Clamping wedge	9,5 mm, for tip 10,5 x 12 mm	39100-0-01050-0

R. Milling Cutter & C. Cutters

Grooving Cutters w. rev. TC tips

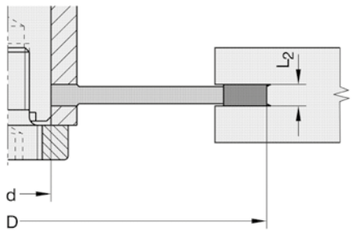

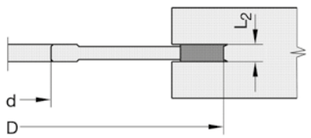

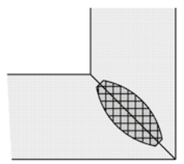

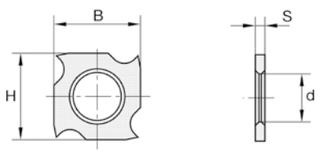

Reversible tip 18 mm

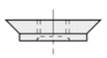

Nut

60250

D mm	L_2 mm	d mm	KN mm	Z/V	Part-No.
125	10,0	30	-	Z4-V4	60250-5-12510-R

60255 for biscuit

D mm	L_2 mm	d mm	Type	Z/V	Part-No.
100	3,97	22	A	Z2+2-V4	60255-5-00002-0
100	3,97	22	B	Z2+2-V4	60255-5-00002-V
100	3,97	30	B	Z2+2-V4	60255-5-00003-V

40145 TCT, for biscuit

D mm	L_2 mm	d mm	Type	Z/V	Part-No.
100	3,97	22	B	Z2-V4	40145-5-00001-V

Technical details

No. 60250/60255: Tool body with two upper and lower reversible TC tips each, 4-sided, on
No. 60250 up from L2 = 8 mm with 4 wedge clamped TC raker tips and two reversible TC spurs on top and bottom.
No. 60255 type A: with 4 countersunk holes for Lamello Top 21
No. 60255 type B: with 4 countersunk holes for arbor No. 21079 (page 6.12)
No. 40145: with two reversible TC raker tips and two reversible TC spurs on top and bottom.
All types also applicable for manual feed.

Application

No. 40145/60255: For cutting of grooves for biscuit dowel joint. Assembled on arbor No. 21079 (page 6.12) for use on CNC machines.
No. 60250: For all kinds of grooving operations on table moulders (without keyway) or on CNC machines.
To be used with arbors d = 30 mm.

R.P.M. max = 10 600 (No. 60250)
R.P.M. max = 13 300 (No. 60255 and No. 40145)

Spare parts / Accessories		Part-No.
Reversible TC tip	18 x 18 x 2,0 mm, HW 02, for L_2 = 3,97 + 4 mm	72025-6-00010-0
Reversible TC tip	18 x 18 x 3,0 mm, HW 02, for L_2 = 6 mm	72025-6-00030-0
Reversible TC tip	7,5 x 12 x 1,5 mm, HW 02, for L_2= 8 mm	72010-6-00751-0
Reversible TC tip	9,6 x 12 x 1,5 mm, HW 02, for L_2=10 mm	72010-6-00960-0
Reversible TC spur	14 x 14 x 1,2 mm, for L_2= 3,97 - 7,5 mm	72020-6-01412-0
Reversible TC spur	14 x 14 x 2,0 mm, up from L_2= 8 mm	72020-6-01414-1
Nut	M 4 x 0,5 x 1,6 mm, D=12, for knife 2,0 mm	39153-0-12016-0
Nut	M 4 x 0,5 x 2,2 mm, D=12, for knife 2,5 mm	39153-0-12022-0
Nut	M 4 x 0,5 x 2,8 mm, D=12, for knife 3,0 mm	39153-0-12028-0
Nut	M 4 x 0,5 x 1,1 mm, D=10, for spur 1,2 mm, up from 07/10 model	39153-0-10011-0
Nut	M 4 x 0,5 x 1,6 mm, D=10, for spur 1,2 mm, up to 06/10 model	39153-0-10016-0
Torx countersunk screw	M 4 x 0,5 x 3,2 mm, T 9	39084-0-04032-R
Countersunk screw	M 5 x 9, T20, for spurs 2,0 mm	39085-0-05009-R
Allen screw	M 5 x 16, for L_2= 8/10/12 mm	39266-0-05016-R
Torx key	T 9, with handle	39077-0-03009-2
Torx key	T20, with handle	39077-0-00020-2
Allen key	SW 2,5 (for M 5) hexagon	39120-0-02500-0
Clamping wedge	7,5 mm, for tip 7,5 x 12 mm	39100-0-00750-0
Clamping wedge	8,3 mm, for tip 9,6 x 12 mm	39100-0-00960-0

Extra costs for drilling countersunk for use on arbor No. 21079 (page 6.12) - see page 7.32.

Lock Case Cutters w. interchangeable TC tips Z2

GBM

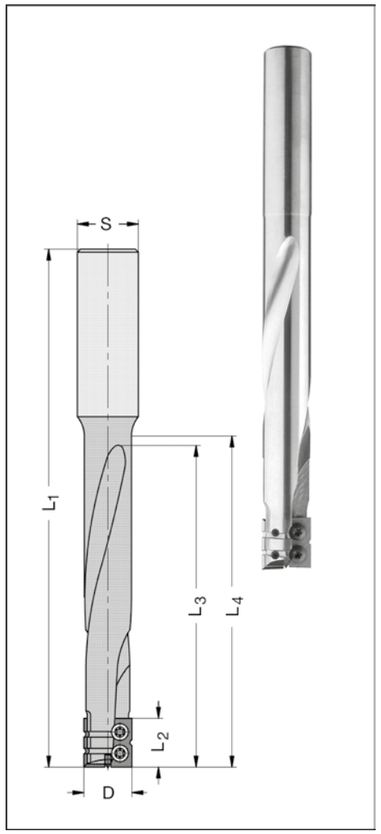

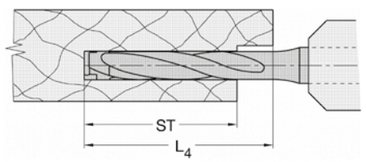

ST = depth of lockset

Interchangeable tips

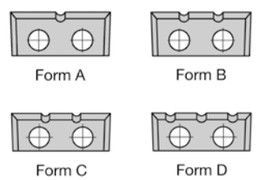

22310

D mm	L_2 mm	L_3 mm	L_4 mm	L_1 mm	Shank mm	Part-No.
14*	16	96	96	170	16 x 60	22310-5-14170-R
16	16	105	105	150[1)]	16 x 45	22310-5-16153-R
16	16	105	113	170	16 x 55	22310-5-16173-R
16	16	105	110	170	20 x 55	22310-5-16170-R
16	16	105	123	180[1)]	16 x 55	22310-5-16183-R
16	16	105	134	210[1)]	25[2)] x 65	22310-5-16216-R
18	16	105	110	170	20[2)] x 55	22310-5-18170-R

* D 14 mm **with** axle angle.
1) Shortening of total length L_1 possible by shortening the shank.
2) Reducing of shank diameter and providing clamping flat available: prices see page 7.29 or 7.30.
Further diameters and lengths optional on request.

Technical details:

Sturdy tool body with two flutes and one interchangeable TC tip each, form A and B (D 16 - 18 mm), form C and D (D14 mm), with chip-breaking grooves.
Tool body of high-density metal, for reduced risk of breakage and vibration-free running.
With TCT with TCT plunge tip. Flute length L_3= 105 mm also good for deeper lock case pockets (ST).
Right-hand rotation. For mechanical feed.

Application

Designed to machine lock case and face plate pockets with step-by-step adjustment.
Interchangeable TC tips ensure constant cutting circle.

Recommended operating data:
feed rate v_f = 12 m/min, R.P.M. = 12-18 000. Stroke: solid wood 8 - 10 mm, chipboard 15 mm.

- Constant diameter through interchangeable tip design
- Special TC grade for increased tool life (compared with tools of solid TC)
- Tool body of high-density metal, for reduced risk of breakage and vibration-free running
- Economical-priced change of blunt or damaged tips

Spare parts / Accessories		Part-No.
Interch. TC tip	16 x 7 x 1,5 mm, Form A (1 groove), for D= 16/18 mm	72125-6-01600-A
Interch. TC tip	16 x 7 x 1,5 mm, Form B (2 grooves), for D= 16/18 mm	72125-6-01600-B
Interch. TC tip	16 x 6 x 1,5 mm, Form C (2 grooves), for D= 14 mm	72125-6-01600-C
Interch. TC tip	16 x 6 x 1,5 mm, Form D (3 grooves), for D= 14 mm	72125-6-01600-D
Torx clamping screw	M 3 x 3,3, T 9, for D= 14 mm	39081-0-03033-R
Torx clamping screw	M 3 x 4, T 9, for D= 16 + 18 mm	39081-0-03040-R
Torx key	T 9, with handle	39077-0-03009-2

For use with Weldon holders, please state type of shank or enclose a detailed sketch or sample.

① DIN 6535-HB 16 (DIN 1835-B16) e.g. MAKA

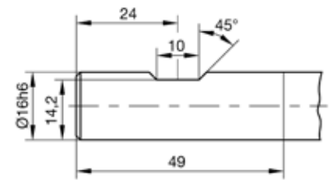

② DIN 6535-HB 20 (DIN 1835-B20)

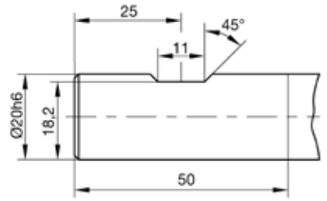

③ For WEEKE / HOMAG

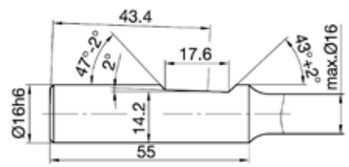

④ For WEEKE / HOMAG

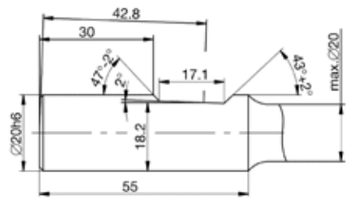

Vari-Angle Cutterheads w. rev. TC tips Z2

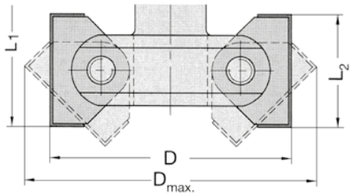

22095 continuously adjustable

D mm	D_{max} mm	L_2 mm	L_1 mm	Shank mm	Part-No.
85	102	40	95	20 x 55 m. E. M 8	22095-5-00005-R
85	102	40	95	25 x 55 m. E. M 8	22095-5-00006-R
110	134	50	114	25 x 55 m. E. M 8	22095-5-00506-R

Technical details
With two reversible TC tips in swivelling tip retainers. Cutting on periphery and on both sides.
Swivelling range towards the top 0-45°, towards the bottom 0-90°, **continuously** variable adjustment according to precise scale. Grid step 7,5°.
No displacement of the adjusted bevelling angle when fixing the tip retainers.
For manual and mechanical feed.

Application
For jointing, rebating and bevelling of wood and various kinds of wood composites and boards on CNC-machines and stationary routers.

R.P.M. max. = 12 000 (D= 85 mm)
R.P.M. max. = 10 000 (D= 110 mm)

Spare parts / Accessories		Part-No.
Reversible TC tip	40 x 12 x 1,5 mm, 4-sided, HW 02	72014-6-04000-0
Reversible TC tip	50 x 12 x 1,5 mm, 4-sided, HW 02	72014-6-05000-0
Reversible TC tip	50 x 12 x 1,5 mm, 4-sided, HW 01	72014-6-05000-F
Clamping wedge	40 mm	39095-0-04001-0
Clamping wedge	50 mm	39095-0-05001-0
Locking screw	M 5 x 16 ISO 4762	39165-0-05016-R
Clamping set, 3-part design	1 locking screw M5 a. 2 clamping bodies	39095-0-00003-0
Allen screw	M 6 x 8 ISO 4028	39266-0-06008-R
Key with T-handle	SW 4	39140-0-00401-0
Allen key	SW 3	39120-0-03000-0
Key with T-handle	SW 3	39140-0-00302-0

Bevel Cutters w. rev. TC tips Z2

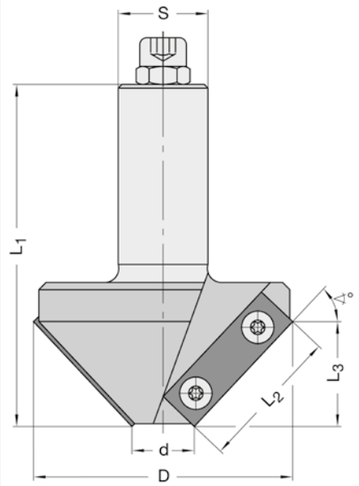

22170

D/d mm	Angle	L_2 mm	L_3 mm	L_1 mm	Shank mm	Part-No.
74/18	45°	40	28	95	3/4" x 55 m. E. M 8	22170-5-45004-R
74/18	45°	40	28	95	20 x 55 m. E. M 8	22170-5-45005-R
74/18	45°	40	28	95	25 x 55 m. E. M 8	22170-5-45006-R

Technical details
Tool body with two reversible TC tips. Cutting on periphery only. Right-hand rotation. For mechanical feed.

Application
For bevelling in various kinds of wood composites and panel materials on CNC machines and stationary routers.

R.P.M. max. 18 000

Spare parts / Accessories		Part-No.
Reversible TC tip	40 x 12 x 1,5 mm, 2-sided, HW 02	72010-6-04001-0
Reversible TC tip	40 x 12 x 1,5 mm, 2-sided, HW 01	72010-6-04003-F
Reversible TC tip	40 x 12 x 1,5 mm, 2-sided, HW 04	72010-6-04003-0
Reversible TC tip	40 x 12 x 1,5 mm, 2-sided, HW 03	72010-6-04004-0
Torx clamping screw	M 4 x 5,9, extra large head, T15	39076-0-04000-R
Torx key	T15, with handle	39077-0-04015-2

R. Milling Cutter & C. Cutters

Bevel/Folding Cutters w. reversible TC tip Z1

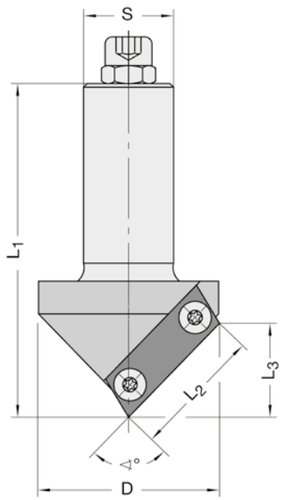

22180-5

D mm	Angle	L_2 mm	L_3 mm	L_1 mm	Shank mm	Part-No.
43	45°	46,4	43	115	¾" x 55 m. E. M 8	22180-5-00454-R
43	45°	46,4	43	115	20 x 55 m. E. M 8	22180-5-00455-R
43	45°	46,4	43	115	25 x 55 m. E. M 8	22180-5-00456-R
41,5	60°	41,5	35	118	¾" x 55 m. E. M 8	22180-5-00604-R
41,5	60°	41,5	35	118	20 x 55 m. E. M 8	22180-5-00605-R
41,5	60°	41,5	35	118	25 x 55 m. E. M 8	22180-5-00606-R
50	90°	36,4	25	93	¾" x 55 m. E. M 8	22180-5-50904-R
50	90°	36,4	25	93	20 x 55 m. E. M 8	22180-5-50905-R
50	90°	36,4	25	93	25 x 55 m. E. M 8	22180-5-50906-R
50	91°	36,4	25	93	¾" x 55 m. E. M 8	22180-5-50004-R
50	91°	36,4	25	93	20 x 55 m. E. M 8	22180-5-50005-R
50	91°	36,4	25	93	25 x 55 m. E. M 8	22180-5-50006-R

For mitre folding in chipboard rather angle 90° than angle 91° should be used.

Technical details
Tool body with one reversible TC tip, HW 02, bevelled on both sides. Precise centre point on bottom.
Stop pin for easy adjustment when turning or exchanging the tip.
Right-hand rotation. For mechanical feed.

Application
For bevelling, decorative grooving and mitre folding in various kinds of wood composites and panel materials on CNC machines.

R.P.M. max. 18 000

Spare parts / Accessories		Part-No.
Reversible TC tip	40 x 12 x 1,5 mm, HW 02, for 90° + 91°	72015-6-04015-R
Reversible TC tip	40 x 12 x 1,5 mm, HW 01, for 90° + 91°	72015-6-04001-R
Reversible TC tip	50 x 12 x 1,5 mm, HW 02, for 60°	72015-6-05060-R
Reversible TC tip	50 x 12 x 1,5 mm, HW 01, for 60°	72015-6-05001-R
Reversible TC tip	60 x 12 x 1,5 mm, HW 02, for 45°	72015-6-06045-R
Torx clamping screw	M 4 x 5,9, extra-large head, T15	39076-0-04000-R
Torx clamping screw	M 4 x 4 extra-large head, T15	39076-0-04040-R
Torx key	T15, with handle	39077-0-04015-2

HW 01 = for MDF and extremely abrasive material
HW 02 = standard grade

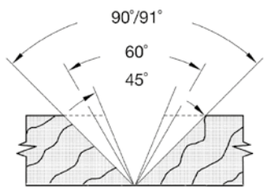

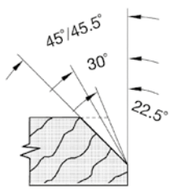

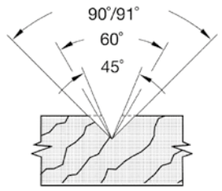

Corner Forming Cutters w. reversible TC tip Z1

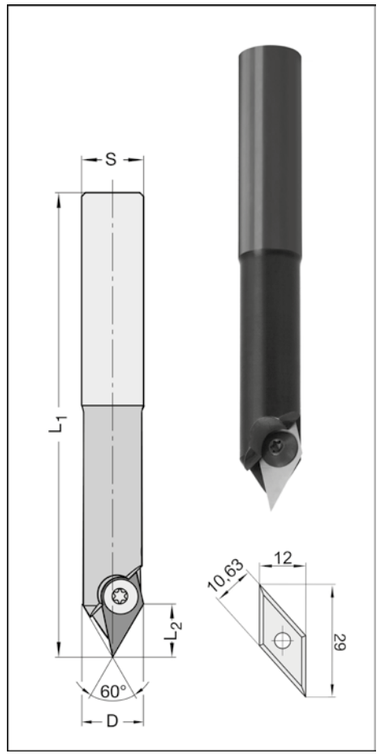

22180

D mm	Angle	L_2 mm	L_1 mm	Shank mm	Part-No.
16	60°	13,7	120	16 x 55	22180-5-16003-R
16	60°	13,7	120	16 x 55	22180-5-16003-L

Solid TC - Corner forming cutter No. 20247-6 on page 3.9.

Technical details
Tool body with one reversible TC tip, bevelled on both sides. Precise centre point on bottom.
With knife stop for easy knife assembling during turning and changing. For mechanical feed.

Application
For corner forming/finish cutting of corners for openings, e.g. in the door production on 5-axis machines.
Also applicable for decorative grooving.

R.P.M. max 24 000

Spare parts / Accessories		Part-No.
Reversible TC tip	29/10,63 x 12 x 1,5 mm, HW 05, for 60° right-hand	72015-6-29160-R
Reversible TC tip	29/10,63 x 12 x 1,5 mm, HW 05, for 60° left-hand	72015-6-29160-L
Torx clamping screw	M 4 x 4 large head, T15	39076-0-04040-R
Torx key	T15, with handle	39077-0-04015-2

Corner Notching Cutters w. reversible TC tips Z4

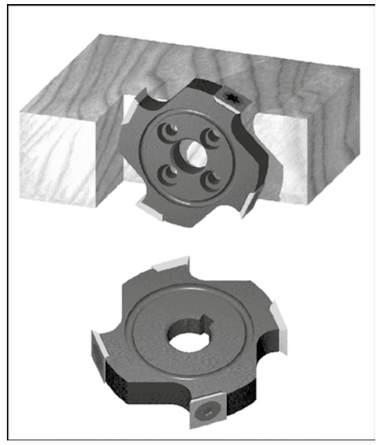

61200

D mm	L_2 mm	d mm	KN mm	Z	Part-No.
70	14,3	16*	-	4	61200-5-70143-V
70	14,3	16	5 x 2,3	4	61200-5-70143-1

* With 4 retaining holes

Technical details
Tool body with four straight TC tips, with 4 cutting edges. For mechanical feed.

Application
Cutter body with retaining holes, for notching/finishing the corners of apertures (e.g. in door production) on corner notching units (Weeke, Homag, IMA). Left-hand rotation.
With keyway, for jointing and trimming on Homag edge banding machines.
For either right-hand or left-hand rotation.

Spare parts / Accessories		Part-No.
Reversible TC tip	14,3 x 14,3 x 2,5 mm, HW 04	72020-6-01430-0
Torx countersunk screw	M 5 x 12, T20	39085-0-05012-R
Torx key	T20, with handle	39077-0-00020-2

R. Milling Cutter & C. Cutters

Decorative Groove Cutter w. reversible TC tip Z1

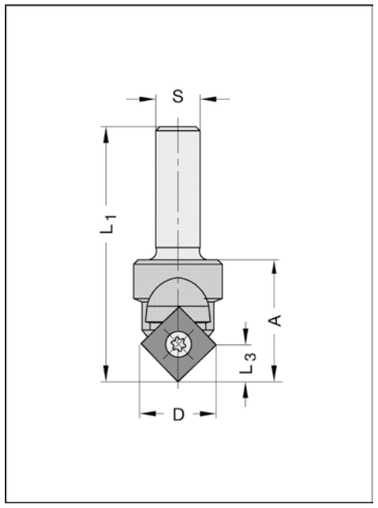

22195

D mm	L_3 mm	A mm	L_1 mm	Shank mm	Part-No.
Basic tool body with tip No. 1					
17	8,3	27	67	10 x 40	22195-5-17000-R
Set in wooden case, consisting of:					
Tool body	with	altogether	7 tips*		22195-5-00000-R

Technical details
Tempered tool body, supplied with one reversible TC tip for profile No. 1 as basic equipment.
TC tip with shear cut from top. The basic tip can be profiled on one side.
Maximum depth of profile according to illustration below. Right-hand rotation. For mechanical feed.

Application
For decorative grooving, lettering and engraving, round over of edges, etc.

R.P.M. max. 18 000

Quantity discounts, ordering same profile: 5 - 9 pcs. = 12%, up from 10 pcs. = 25 %.
Template costs: see page 7.32

Spare parts / Accessories		Part-No.
Interch. TC tip	12 x 12 x 1,5 mm, HW 03, profile no. 1 (basic equipm.)	72014-6-01201-0
Interch. TC tip	12 x 12 x 1,5 mm, HW 03, profile nos. 2/3/4	72190-6-00004-R
Interch. TC tip	12 x 12 x 1,5 mm, HW 03, profile no. 5	72190-6-00005-R
Interch. TC tip	12 x 12 x 1,5 mm, HW 03, profile nos. 6/7/8	72190-6-00008-R
Interch. TC tip	12 x 12 x 1,5 mm, HW 03, profile no. 9	72190-6-00009-R
Interch. TC tip	12 x 12 x 1,5 mm, HW 03, profile no. 10	72190-6-00010-R
Interch. TC tip	12 x 12 x 1,5 mm, HW 03, profile no. 11	72190-6-00011-R
Interch. TC tip	12 x 12 x 1,5 mm, HW 03, profile no. 12	72190-6-00012-R
Special profile tip	12 x 12 x 1,5 mm, HW 03, for profiles up to D = 17 mm	72190-6-00000-R
Torx clamping screw	M 4 x 4,8 T15	39081-0-04048-R
Torx key	T15, with flag	39077-0-04015-1

*** Set consiting of:**
1 pc. Decorative Groove cutter with tip no. 1
1 pc. Profile tip for profiles Nos. 2/3/4
1 pc. Profile tip for profile No. 5
1 pc. Profile tip for profile Nos. 6/7/8
1 pc. Profile tip for profile No. 10
1 pc. Profile tip for profile No. 11
1 pc. Profile tip for profile No. 12
1 pc. Torx key T15
1 pc. Torx clamping screw

Basic equipment:

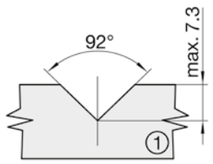

Area available for profiling (1:1)

Standard profiles:

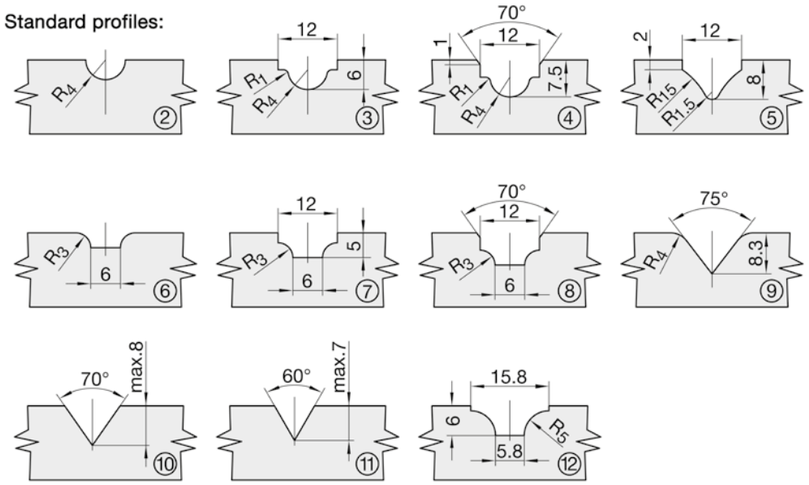

Decorative Groove Cutter w. reversible TC tip Z1

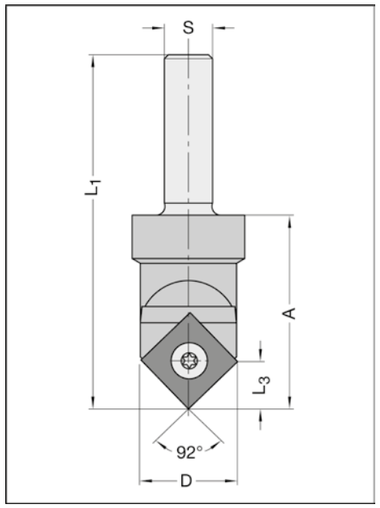

22196

D mm	L_3 mm	A mm	L_1 mm	Shank mm	Part-No.
24	11,8	48	88	12 x 40	22196-5-00024-R

Technical details
Tool body supplied with one reversible TC tip for 92° decorative grooves or 46° bevels.
Can be profiled on one side within the area available for profiling.

Application
For decorative grooving, lettering, etc., as well for bevelling or rounding over of edges.

R.P.M. max. 18 000

Spare parts / Accessories		Part-No.
Reversible TC tip	17 x 17 x 2 mm, HW 04	72018-6-01700-0
Torx clamping screw	M 4 x 5,9, T15	39076-0-04000-R
Torx key	T15, with handle	39077-0-04015-2
Special profile tip	17 x 17 x 2 mm, HW 04	72196-6-00000-R

Quantity discounts, ordering same profile: 5 - 9 pcs. = 12%, up from 10 pcs. = 25 %.
Template costs: see page 7.32

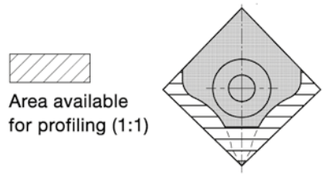

R. Milling Cutter & C. Cutters

Rounding Over/Bevelling Cutters TC Z2 w. interchangeable tips

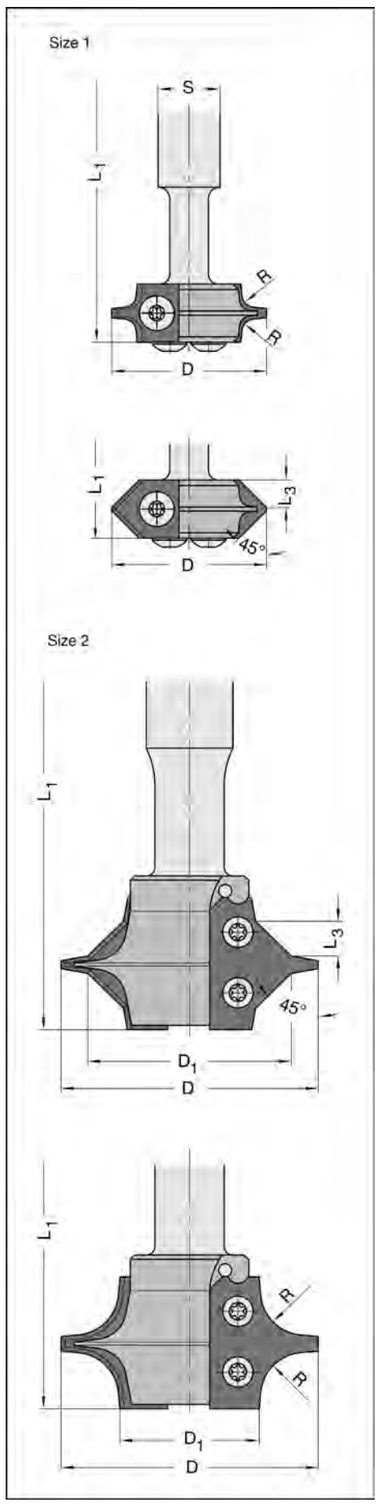

22160

D/D1 mm	h/fmax mm	R/Angle mm/°	L1 mm	L3 mm	Shank mm	Part-No.
Size 1						
40/-	50/-	2	100	-	16 x 60 m. E. M 6	22160-5-00020-R
40/-	50/-	3	100	-	16 x 60 m. E. M 6	22160-5-00030-R
40/-	50/-	4	100	-	16 x 60 m. E. M 6	22160-5-00040-R
40/-	50/-	5	100	-	16 x 60 m. E. M 6	22160-5-00050-R
40/-	50/7	45°	100	7	16 x 60 m. E. M 6	22160-5-00045-R
Size 2						
60/34	55/-	6	120	-	20 x 55 m. E. M 8	22160-5-20060-R
60/34	55/-	8	120	-	20 x 55 m. E. M 8	22160-5-20080-R
60/34	55/-	10	120	-	20 x 55 m. E. M 8	22160-5-20100-R
60/34	55/-	12	120	-	20 x 55 m. E. M 8	22160-5-20120-R
60/47,8	55/8	45°	120	8	20 x 55 m. E. M 8	22160-5-20045-R
Set in wooden box consisting of:						
40/-	50/7	2-5 / 45°	with	in total	10 tips*	22160-5-00000-R
60/34/47,8	55/8	6-12 / 45°	with	in total	10 tips*	22160-5-20000-R

* Set consisting of:
Size 1: Basic tool body and 2 tips each R 2/3/4/5 mm and 45°, Torx screws and Torx-key.
Size 2: Basic tool body and 2 tips each R 6/8/10/12 mm and 45°, Torx screws and Torx-key.

Technical details
Tool body with two interchangeable TC tips.
In the same body either rounding over tips of different radii or 45° bevelling tips can be used. Right-hand rotation.
For mechanical feed.

Application
For one-or both-side rounding over or bevelling in solid wood or various kinds of panel materials on stationary routers or CNC machines.

R = 15 to 30 mm see page 4.45.

R.P.M. max. = 18 000 (size 1)
R.P.M. max. = 15 000 (size 2)

Spare parts / Accessories		Part-No.
Basic tool body size 1	without tips	22160-0-00000-R
Basic tool body size 2	without tips	22160-0-20000-R
Rounding over tip TC	15 x 18 x 2 mm, HW 04, R = 2 mm	72432-6-00020-0
Rounding over tip TC	15 x 18 x 2 mm, HW 04, R = 3 mm	72432-6-00030-0
Rounding over tip TC	15 x 18 x 2 mm, HW 04, R = 4 mm	72432-6-00040-0
Rounding over tip TC	15 x 18 x 2 mm, HW 04, R = 5 mm	72432-6-00050-0
Bevelling tip TC	15 x 18 x 2 mm, HW 04, 45°	72434-6-10045-0
Rounding over tip TC	30 x 25 x 2 mm, HW 02, R = 6 mm	72432-6-20060-0
Rounding over tip TC	30 x 25 x 2 mm, HW 02, R = 8 mm	72432-6-20080-0
Rounding over tip TC	30 x 25 x 2 mm, HW 02, R = 10 mm	72432-6-20100-0
Rounding over tip TC	30 x 25 x 2 mm, HW 02, R = 12 mm	72432-6-20120-0
Bevelling tip TC	30 x 25 x 2 mm, HW 02, 45°	72434-6-20045-R
Torx clamping screw	M 4 x 5, T15 (for size 1)	39081-0-04050-R
Torx clamping screw	M 4 x 5,9, extra-large head, T15 (for size 2)	39076-0-04000-R
Torx key	T15, with handle	39077-0-04015-2

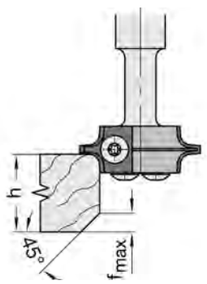

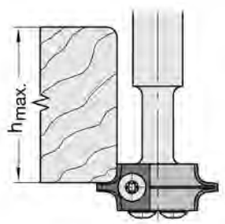

Rounding Over/Bevelling Cutters TC Z1+1 w. interchangeable tips

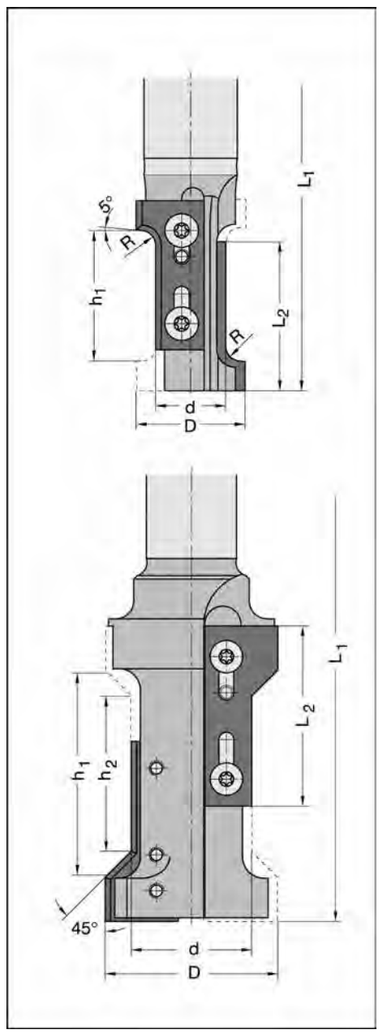

Rounding over:
size 1: h_1 = 19 - 34 mm
size 2: h_1 = 35 - 56 mm

Bevelling:
size 1: h_2 = 13 - 29 mm, h_1 max. = 42 mm
size 2: h_2 = 22 - 43 mm, h_1 max. = 56 mm

size 1: max. R.P.M. = 18 000
size 2: max. R.P.M. = 12 000

22510

d mm	Dmax mm	L2 mm	L1 mm	Shank mm	Part-No.
Basic tool body size 1 - without tips					
20	34	40	113	20 x 55 m. E. M 8	22510-0-00005-R
20	34	40	113	25 x 55 m. E. M 8	22510-0-00006-R
Basic tool body size 2 - without tips					
35	57	50	150	25 x 55 m. E. M 8	22510-0-00206-R

Technical details
Tool body for two adjustable, interchangeable TC knives, for rounding over or bevelling applications.
In the same body, size 1 or size 2, either rounding over or 45° bevelling knives can be used.
Right-hand rotation. For mechanical feed.

Application
For double-sided rounding over or bevelling operations of solid wood or various kinds of panel materials on CNC machines. Cutting on periphery only, not applicable for plunge cutting.

Quantity discounts, ordering same profile: 5 - 9 pcs = 12 %, up from 10 pcs = 25 %.
Template charges: **see page 7.32**

Spare parts / Accessories		Part-No.
Rounding over tip, TC	40 x 17,2 x 2,2 mm, HW 04, R = 3 mm, size 1, top	72510-6-40030-1
Rounding over tip, TC	40 x 17,2 x 2,2 mm, HW 04, R = 3 mm, size 1, bottom	72510-6-40030-2
Rounding over tip, TC	40 x 18,2 x 2,2 mm, HW 04, R = 4 mm, size 1, top	72510-6-40040-1
Rounding over tip, TC	40 x 18,2 x 2,2 mm, HW 04, R = 4 mm, size 1, bottom	72510-6-40040-2
Rounding over tip, TC	40 x 19,2 x 2,2 mm, HW 04, R = 5 mm, size 1, top	72510-6-40050-1
Rounding over tip, TC	40 x 19,2 x 2,2 mm, HW 04, R = 5 mm, size 1, bottom	72510-6-40050-2
Rounding over tip, TC	40 x 20,2 x 2,2 mm, HW 04, R = 6 mm, size 1, top	72510-6-40060-1
Rounding over tip, TC	40 x 20,2 x 2,2 mm, HW 04, R = 6 mm, size 1, bottom	72510-6-40060-2
Rounding over tip, TC	50 x 20,3 x 2,2 mm, HW 04, R = 6 mm, size 2, top	72510-6-50060-1
Rounding over tip, TC	50 x 20,3 x 2,2 mm, HW 04, R = 6 mm, size 2, bottom	72510-6-50060-2
Rounding over tip, TC	50 x 20,3 x 2,2 mm, HW 04, R = 8 mm, size 2, top	72510-6-50080-1
Rounding over tip, TC	50 x 20,3 x 2,2 mm, HW 04, R = 8 mm, size 2, bottom	72510-6-50080-2
Rounding over tip, TC	50 x 24,3 x 2,2 mm, HW 04, R = 10 mm, size 2, top	72510-6-50100-1
Rounding over tip, TC	50 x 24,3 x 2,2 mm, HW 04, R = 10 mm, size 2, bottom	72510-6-50100-2
Bevelling tip, TC	40 x 20,2 x 2,2 mm, HW 04, bevel = 45°, size 1, top	72510-6-40450-1
Bevelling tip, TC	40 x 20,2 x 2,2 mm, HW 04, bevel = 45°, size 1, bottom	72510-6-40450-2
Bevelling tip, TC	50 x 20,2 x 2,2 mm, HW 04, bevel = 45°, size 2, top	72510-6-50450-1
Bevelling tip, TC	50 x 20,2 x 2,2 mm, HW 04, bevel = 45°, size 2, bottom	72510-6-50450-2
Profile tip, TC	40 x 20,8 x 2,2 mm, HW 04, special profiles, size 1, top	72510-6-40000-1
Profile tip, TC	40 x 20,8 x 2,2 mm, HW 04, special profiles, size 1, bot.	72510-6-40000-2
Profile tips, TC	40 x 20,8 x 2,2 mm, HW 02, special profiles, size 1, top	72510-6-40002-1
Profile tip, TC	40 x 20,8 x 2,2 mm, HW 04, special profiles, size 1, bot.	72510-6-40002-2
Profile tip, TC	50 x 24,8 x 2,2 mm, HW 04, special profiles, size 2, top	72510-6-50000-1
Profile tip, TC	50 x 24,8 x 2,2 mm, HW 04, special profiles, size 2, bot.,	72510-6-50000-2
Blank, TC	40 x 20,8 x 2,2 mm, HW 04, unprofiled, size 1	72510-6-40000-0
Blank, TC	40 x 20,8 x 2,2 mm, HW 02, unprofiled, size 1	72510-6-40002-0
Blank, TC	50 x 24,8 x 2,2 mm, HW 04, unprofiled, size 2	72510-6-50000-0
Torx clamping screw	M 4 x 5,9, extra-large head, T15	39076-0-04000-R
Torx key	T15, with handle	39077-0-04015-2

Examples for special profiles:

Profile depth
Size 1 = max. 6 mm
Size 2 = max. 10 mm

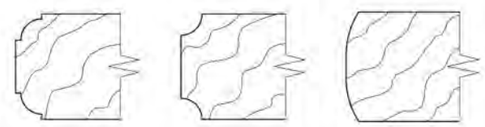

R. Milling Cutter & C. Cutters

Rounding Over/Bevelling Set Z2 w. reversible/interchangeable tips

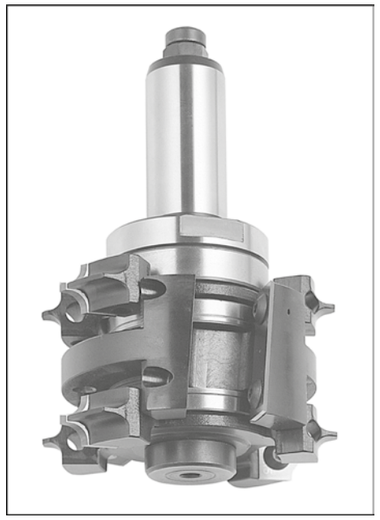

64410 - 64418 Rounding over, bevelling, jointing cutters

D x L_2 x d mm	R/Angle mm/°	for size	L_3 mm	Part-No.
Jointing cutter				
80 x 25 x 20	-	-	-	64418-5-00025-0
80 x 40 x 20	-	-	-	64418-5-00040-0
80 x 50 x 20	-		-	64418-5-00050-0
Rounding over cutter				
92 x 15 x 20	2	1	-	64412-5-00020-0
92 x 15 x 20	3	1	-	64412-5-00030-0
92 x 15 x 20	4	1	-	64412-5-00040-0
92 x 15 x 20	5	1	-	64412-5-00050-0
98 x 22 x 20	6	2	-	64412-5-00060-0
98 x 22 x 20	8	2	-	64412-5-00080-0
106 x 30,5 x 20	10	3	-	64412-5-00100-0
106 x 30,5 x 20	12	3	-	64412-5-00120-0
Bevelling cutter				
92 x 15 x 20	45°	1	6	64414-5-10045-0
98 x 22 x 20	45°	2	9	64414-5-20045-0
106 x 30,5 x 20	45°	3	7	64414-5-30045-0

Technical details

Steel tool body with two reversible, respectively interchangeable TC tips each. Constant cutting circle diameter. Without wedges. Tempered thoroughly balanced arbors, with feather key to ensure positive drive. Available shank types: 25 mm parallel, HSK-F-63 a.s.o. For Part-Nos. and illustration see pages 6.8 and 6.13. Right-hand rotation. For mechanical feed.

R.P.M. max = 12 000

Special advantages:

- Large chip clearance area and consequently enhanced chip removal made possible by tips clamping without wedges.
- Improved balancing quality because of less components
- All cutters with compressive cut, jointing cutter with shear angle
- Two equal radii in the tip (respectively with bevel on both sides), thereby doubling tool life
- Easy to operate, using the same tips in the top and bottom cutter
- It is possible to use tips of various radii respectively bevelling tips in the same basic tool body (sizes 1, 2, 3 see page 4.33)
- Useable for either right-hand or left-hand rotation, just by turning the complete set on the arbor
- Only 3 jointing cutters (25, 40, 50 mm) for materials of 13 up to 59 mm thickness.

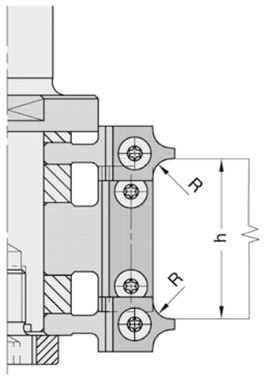

Possible combinations:

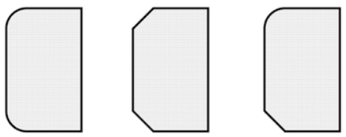

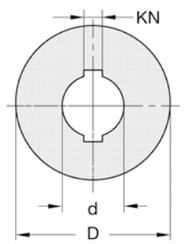

Application

For jointing, rounding over and bevelling of solid wood on CNC machines.
It is possible to combine jointing, rounding over and bevelling cutters in various ways.
In conjunction with different shank type arbors, the set can be used on all stationary routers and CNC machines in common use. Adaption to the thickness of material to be worked through face ground spaces.

Rounding Over/Bevelling Set Spare parts contenuation

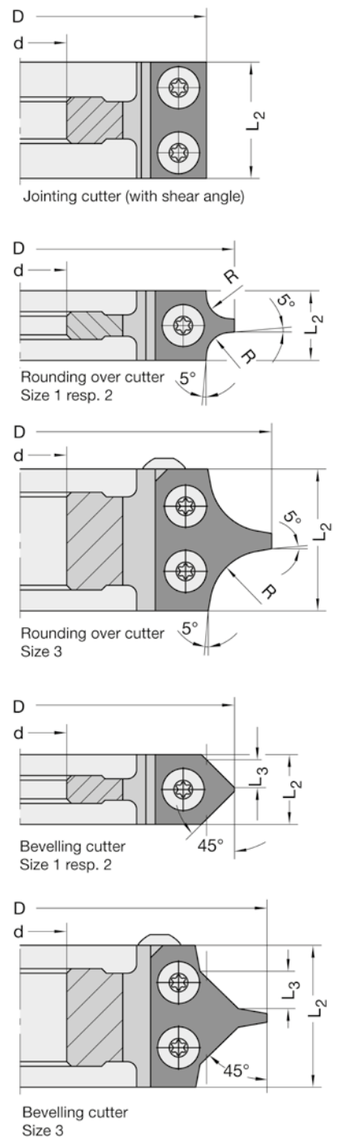

64410 - 64418 Rounding over/bevel/jointing cutters

Spare parts / Accessories		Part-No.
Rounding over tip TC	15 x 18 x 2 mm, HW 04, R = 2 mm, size 1	72432-6-00020-0
Rounding over tip TC	15 x 18 x 2 mm, HW 04, R = 3 mm, size 1	72432-6-00030-0
Rounding over tip TC	15 x 18 x 2 mm, HW 04, R = 4 mm, size 1	72432-6-00040-0
Rounding over tip TC	15 x 18 x 2 mm, HW 04, R = 5 mm, size 1	72432-6-00050-0
Rounding over tip TC	22 x 21 x 2 mm, HW 04, R = 6 mm, size 2	72432-6-00060-0
Rounding over tip TC	22 x 21 x 2 mm, HW 04, R = 8 mm, size 2	72432-6-00080-0
Rounding over tip TC	30 x 25 x 2 mm, HW 02, R = 10 mm, size 3	72432-6-20100-0
Rounding over tip TC	30 x 25 x 2 mm, HW 02, R = 12 mm, size 3	72432-6-20120-0
Rounding over tip TC*	17,5 x 26 x 2 mm, HW 04, R = 10 mm, size 3, top	72432-6-00100-1
Rounding over tip TC*	17,5 x 26 x 2 mm, HW 04, R = 12 mm, size 3, top	72432-6-00120-1
Rounding over tip TC*	17,5 x 26 x 2 mm, HW 04, R = 10 mm, size 3, bottom	72432-6-00100-2
Rounding over tip TC*	17,5 x 26 x 2 mm, HW 04, R = 12 mm, size 3, bottom	72432-6-00120-2
Bevelling tip TC	15 x 18 x 2 mm, HW 04, bevel = 45°, $L_{3\,max}$= 6 mm, size 1	72434-6-10045-0
Bevelling tip TC	22 x 21 x 2 mm, HW 04, bevel = 45°, $L_{3\,max}$= 9 mm, size 2	72434-6-20045-0
Bevelling tip TC	30 x 25 x 2 mm, HW 02, bevel = 45°, $L_{3\,max}$= 7 mm, size 3	72434-6-20045-R
Bevelling tip TC*	17,5 x 26 x 2 mm, HW 04, bevel = 45°, $L_{3\,max}$= 12 mm, size 3, top	72434-6-30045-1
Bevelling tip TC*	17,5 x 26 x 2 mm, HW 04, bevel = 45°, $L_{3\,max}$= 12 mm, size 3, bottom	72434-6-30045-2
Reversible TC tip	25 x 12 x 1,5 mm, HW 03	72010-6-02504-0
Reversible TC tip	40 x 12 x 1,5 mm, HW 03	72010-6-04004-0
Reversible TC tip	50 x 12 x 1,7 mm, HW 03, 4-sided, 3-hole design	72016-6-05004-0
Torx clamping screw	M 4 x 5,9, extra-large head, T15	39076-0-04000-R
Torx key	T15, with handle	39077-0-04015-2
Spacer set**	d= 20 mm, D= 35 mm, KN 6 x 1,5 mm	39548-0-00001-1

* for design up to 05/09 model.
**Set of spacer see page 7.27, single spacers on page 7.26.

Table to determine the thickness of material

Edge profile	with jointing cutter L_2 = 25	40	50
Size 1			
R = 2 mm	13 – 27	23 – 42	33 – 52
R = 3 mm	13 – 29	23 – 44	33 – 54
R = 4 mm	13 – 31	23 – 46	33 – 56
R = 5 mm	13 – 33	23 – 48	33 – 58
3 × 45°	8 – 29	18 – 44	28 – 54
Size 2			
R = 6 mm	19 – 35	29 – 50	39 – 54
R = 8 mm	19 – 39	29 – 54	39 – 58
3 × 45°	8 – 29	18 – 44	28 – 54
Size 3			
R = 10/12 mm/45°	26 - 40	31 - 56	41 - 59

Arbors (d = 20 mm)

Table to determine clamping length (L_2)

Rounding over / bevelling cutter		Jointing cutter 25 mm	40 mm	50 mm
R2, R3, R4, R5, 45°	= Size 1	L_2 = 40	55	70
R6, R8, 45°	= Size 2	55	70	70
R10, R12, 45°	= Size 3	55	70	70

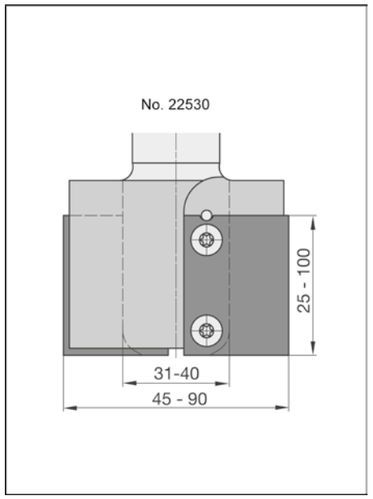

22529 - 22542 External profiling

a) Small diameter F_{min} can be 31 mm or more:

Tool body No. 22530, page 4.42 / No. 22530-90, page 4.44.

Select the cutting length (knife width) L_2. The adjoining "knive numbers" refer to the available different heights of the interchangeable knives.
If several "knive numbers" are specified for a cutting length L_2 (for the same cutter body) a knife can be selected for which "area of profiling" corresponds to the profile to be milled.

Depending on the knife selected, different cutting circle diameters may result, specified in the table of the body under F_{max}.

If the profile depth (area that can be profiled) of the given knive number is not sufficent, choose:

Bodies No. 22538-30, page 4.46 / No. 22530-97, page 4.48 / No. 22542, page 4.48 / 22440, page 4.49 / 22542, page 4.50:

Same test with the given "knive numbers".

Should none of the knives be suitable here either, a special body is required, in extreme cases also with special knives.

b) Small diameter F_{min} must be less than 31 mm:

Body No. 22534 (F_{min} = 10 mm), page 4.43 / No. 22529 (F_{min} = 17 mm), page 4.41 or No. 22532 (F_{min} = 19 mm), page 4.43.

Procedure as described in a).

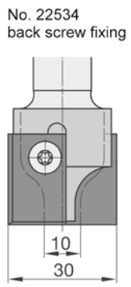

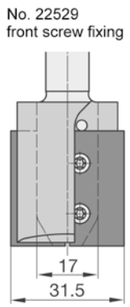

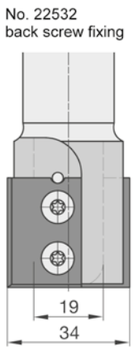

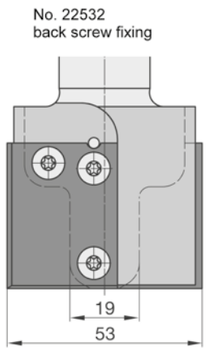

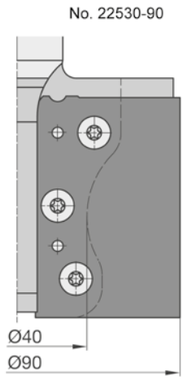

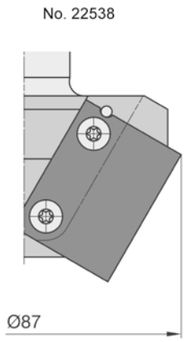

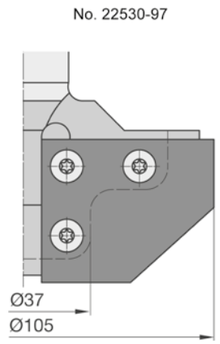

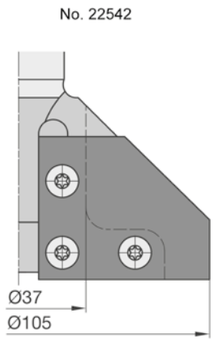

Cutters w. interch. TC knives for free profiling overview

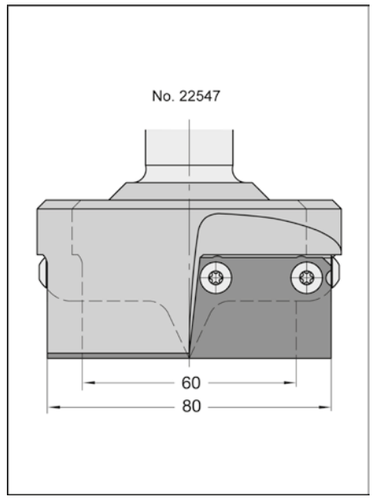

22195 - 22547 Internal profiling (bottom cutting)

For profiles up to approx. 20 to 24 mm width, covered by No. 22195, page 4.28 or No. 22196, page 4.29, these should be also used, i.e. Z= 1.

Up from a width of approx. 20 mm, it is preferable to select Z= 2 (No. 22543, page 4.37 / 22545, page 4.38 or No. 22547, page 4.40).

Advantages: Better balancing, better surface finish, higher feed rates possible.

Further procedure:
Select the appropriate knives and the corresponding body.
Determine the TC grade according to the knive tables on the pages of the bodies or on the pages of the interchangeable TC knives (pages 7.11 - 7.13).
Please observe the quantity scale and the template costs.

Basic order information

1 pc Cutter body, e.g. No. 22530-0-55406-R (profiled body, L_2= 40 mm, shank = 25 mm)
2 pcs Profile knives, e.g. No. 72531-6-40251-R (profile knife no. 5 = 40 x 25 x 2 mm, HW04*)

*The knive tables on pages 7.11 - 7.13 shows most of the knives in different TC grades:
HW 01 = for MDF and extremely abrasive materials
HW 02 = standard grade
HW 04 = especially for solid wood

Please keep in mind that from quantity of 10 knives (of the same profile) no template costs will be charged.
With repeat orders there is generally no charge of template costs.

We will be happy to help to choose the tools for you.
Please send us your wood sample or a dimensioned sketch or drawing.

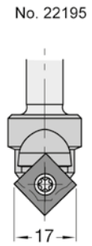

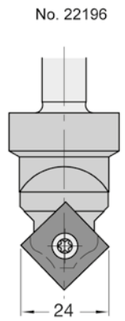

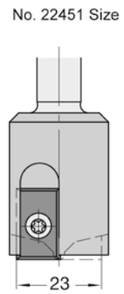

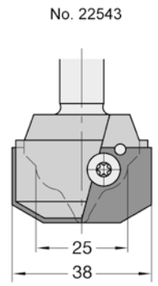

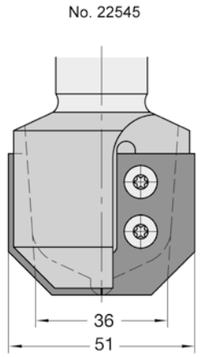

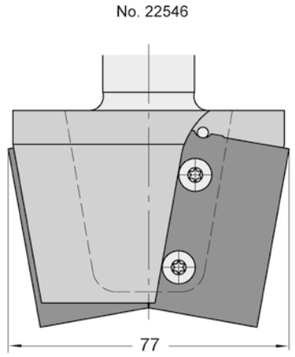

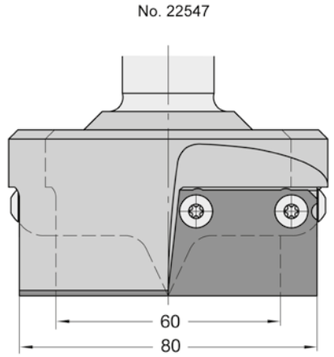

R. Milling Cutter & C. Cutters

Universal Profile Cutter for reversible TC tip Z1

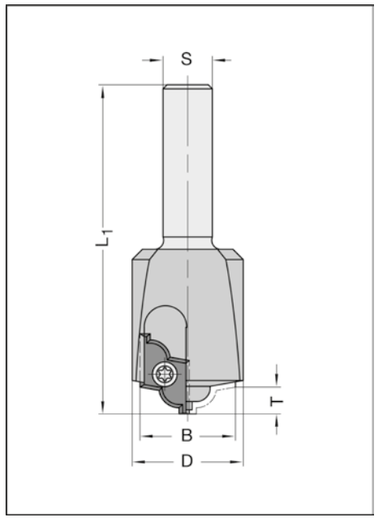

22451

D mm	B_{max} mm	L_1 mm	Shank mm	Part-No.
Size 1				
27	23	69	12 x 40	22451-0-27002-R

Technical details
Tool body for one reversible TC tip, profiled on both sides, with shear angle.
Can be resharpened several times (depending on profile depth). Right-hand rotation. For mechanical feed.
The interchangeable knives have to be ordered **in addition**.

Application
For cutting decorative grooves, rosettes, etc. on stationary routers and CNC routers.
Profile width and profile depth according to illustrations below (full size).

R.P.M. $_{max.}$ = 18 000

Quantity discounts, ordering same profile: 5 - 9 pcs. = 12%, up from 10 pcs. = 25 %.
Template costs: see page 7.32

Decorative groove cutters Nos. 22195 (page 4.28) and 22196 (page 4.29). Bottom cutting profile cutters Nos. 22543 (page 4.37) and 22545 (page 4.38) as well as No. 22470 (page 4.57).

Spare parts / Accessories		Part-No.
Profile knife, TC	20 x 12 x 1,5 mm, size 1, profiled, HW 02	72451-6-10001-R
Profile knife, TC	36 x 21 x 2 mm, size 2, profiled, HW 02	72451-6-20001-R
Reversible TC tip	20 x 12 x 1,5 mm, size 1, unprofiled, HW 02	72010-6-02001-0
Blank, TC	36 x 21 x 2 mm, size 2, unprofiled, HW 02	72451-6-20000-R
Torx clamping screw	M 4 x 6,T15, (for size 1)	39081-0-04060-R
Torx clamping screw	M 4 x 5,9, extra-large head, T15, (for size 2)	39076-0-04000-R
Torx key	T15, with flag	39077-0-04015-1
Torx key	T15, with handle	39077-0-04015-2

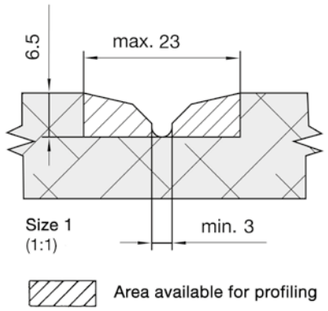

RAPIDO Bottom Cutting Profiler for TC knives Z2

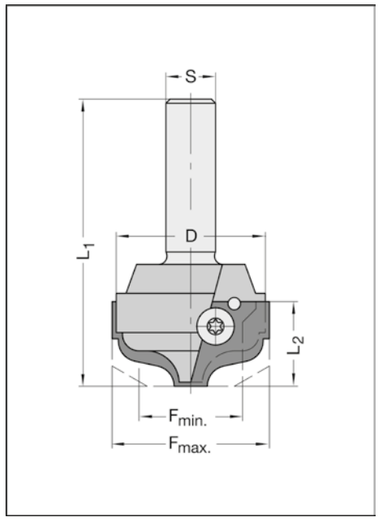

22543 without interchangeable TC knives

F_{max} mm	D mm	L_2 mm	F_{min} mm	L_1 mm	Shank mm	Part-No.
Profiled body						
38	36	20,5	31,5	70	12 x 40	22543-0-38003-R
38	36	20,5	31,5	70	12,7 (½") x 40	22543-0-38009-R
Unprofiled body						
38	36	20,5	31,5	70	12 x 40	22543-0-36000-R
38	36	20,5	31,5	70	12,7 (½") x 40	22543-0-36010-R

Quantity discounts, ordering same profile: 5 - 9 pcs = 12 %, up from 10 pcs = 25 %.
Template costs: see page 7.32

HW 01 = for MDF
HW 04 = for solid wood

Spare parts / Accessories		Part-No.
Profile knife, TC	22 x 19 x 2 mm, profiled, HW 01	72543-6-22011-R
Profile knife, TC	22 x 19 x 2 mm, profiled, HW 04	72543-6-22041-R
Blank, TC	22 x 19 x 2 mm, unprofiled, HW 01	72543-6-22010-R
Blank, TC	22 x 19 x 2 mm, unprofiled, HW 04	72543-6-22040-R
Torx clamping screw	M 4 x 5,9, extra-large head, T15	39076-0-04000-R
Torx key	T15, with handle	39077-0-04015-2

Technical details
Tool body for two interchangeable TC knives, profiled on one side, with shear angle. Right-hand rotation. For mechanical feed. The interchangeable TC knives, available in two different TC grades can be profiled according to adjacent illustrations.
Interchangeable knives have to be ordered **in addition.**

Application
For cutting profile grooves, rosettes, decorative profiles in furniture and door production on stationary routers and CNC machines.

R.P.M. $_{max.}$ = 18 000

Limited use of the available area for profiling possible, based on application - and production technical reasons.

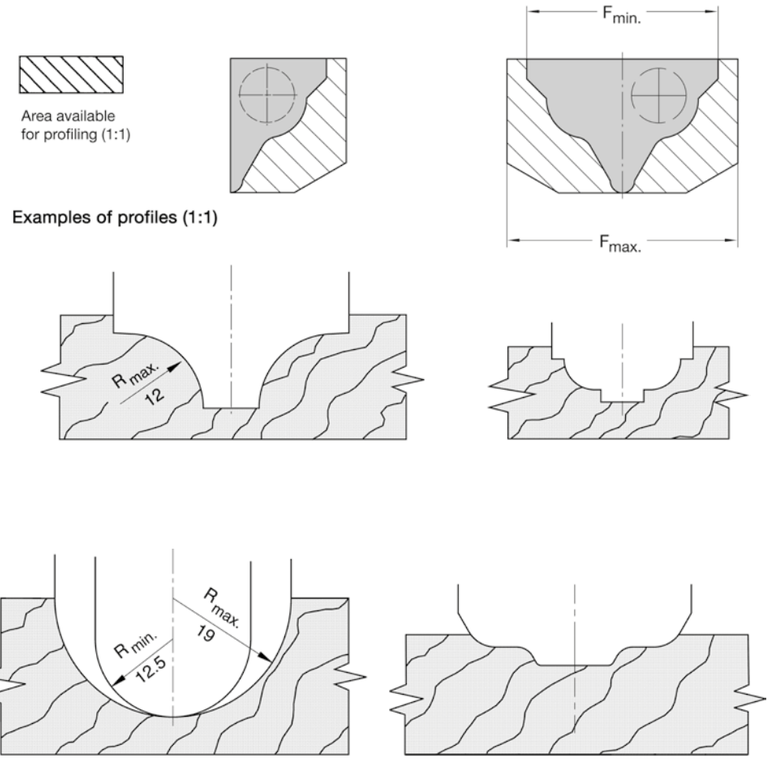

R. Milling Cutter & C. Cutters

RAPIDO Bottom Cutting Profiler for TC knives Z2

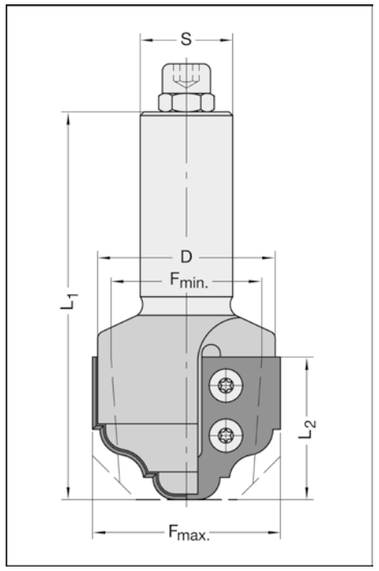

22545 without interchangeable TC knives

F_{max} mm	D mm	L_2 mm	F_{min} mm	L_1 mm	Shank mm	Part-No.
51	48	38,5	41	105	¾" x 55 m. E. M 8	22545-0-00304-R
51	48	38,5	41	105	20 x 55 m. E. M 8	22545-0-00305-R
51	48	38,5	41	105	25 x 55 m. E. M 8	22545-0-00306-R

Quantity discounts, ordering same profile: 5 - 9 pcs. = 12%, up from 10 pcs. = 25 %.
Template costs: see page 7.32

HW 01 = for MDF
HW 04 = for solid wood

Spare parts / Accessories		Part-No.
Profile knife, TC	40 x 25,5 x 2 mm, profiled, HW 04	72545-6-40101-R
Profile knife, TC	40 x 25,5 x 2 mm, profiled, HW 01	72545-6-40201-R
Blank, TC	40 x 25,5 x 2 mm, unprofiled, HW 04	72545-6-40100-R
Blank, TC	40 x 25,5 x 2 mm, unprofiled, HW 01	72545-6-40200-R
Torx clamping screw	M 4 x 5,9, extra-large head, T15	39076-0-04000-R
Torx key	T15, with handle	39077-0-04015-2

Technical details
Tool body for two profiled, interchangeable TC knives, with shear angle. Right-hand rotation. For mechanical feed. If required, the basic tool body can be reduced to F_{min} = 41 mm for extra costs. The interchangeable TC knives, available in two different TC grades, can be profiled according to adjacent illustrations. Interchangeable knives have to be ordered **in addition.**

Application
For cutting profile grooves, rosettes, decorative profiles in furniture and door production on stationary routers and CNC machines.

R.P.M. $_{max.}$ = 12 000

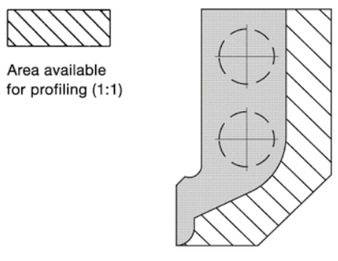

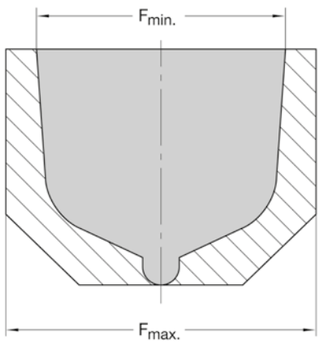

F < 51 mm can be obtained only by reducing the basic tool body (Extra charge on request)

Examples of profiles (1:1)

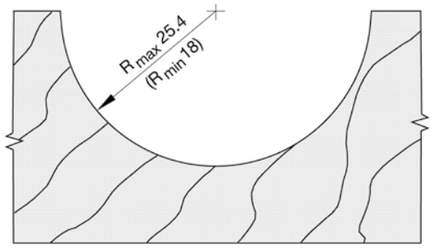

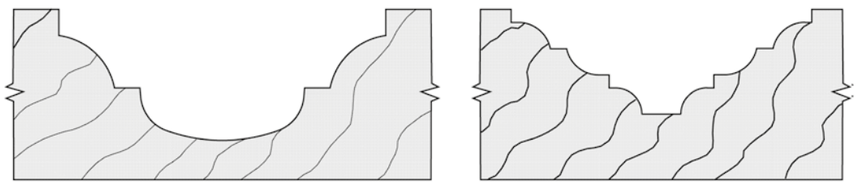

RAPIDO Bottom Cutting Profiler for TC knives Z2 for double profiles

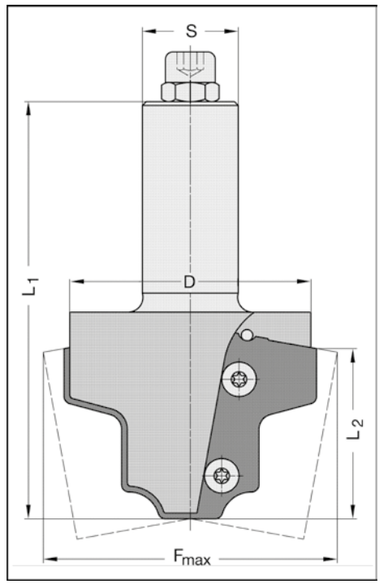

22546 without interchangeable TC knives

F_{max} mm	D mm	L_2 mm	f. knives No.	L_1 mm	Shank mm	Part-No.
Profiled body						
77	74	43	47	115	¾" x 55 m. E. M 8	22546-0-77004-R
77	74	43	47	115	20 x 55 m. E. M 8	22546-0-77005-R
77	74	43	47	115	25 x 55 m. E. M 8	22546-0-77006-R
Unprofiled body						
77	74	43	47	113	¾" x 55 m. E. M 8	22546-0-74004-R
77	74	43	47	113	20 x 55 m. E. M 8	22546-0-74005-R
77	74	43	47	113	25 x 55 m. E. M 8	22546-0-74006-R

Technical details
Tool body for two profiled, interchangeable TC knives, with shear angle. Right-hand rotation.
For mechanical feed. The interchangeable knives can be profiled according to adjacent illustrations.
The profile of tool body will be adapted in each case to the appropriate profile of knife.
The interchangeable knives have to be ordered **in addition.**

Application
Cutting interior as well as exterior profiles, e.g. on furniture doors through mooving Z-axis.
Choose appropiate TC grade, for solid wood (HW 04) or for wood composites (HW 02).

R.P.M. $_{max.}$ = 12 000

Quantity discounts, ordering same profile: 5 - 9 pcs. = 12%, up from 10 pcs. = 25 %.
Template costs: see page 7.32

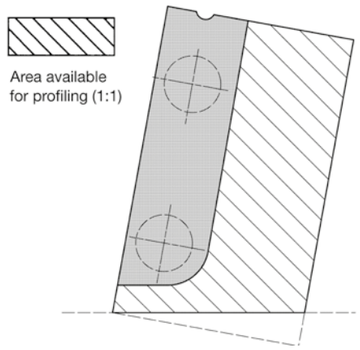

Spare parts / Accessories		Part-No.
Profile knife, TC	50 x 30 x 2 mm, profiled, HW 02	72546-6-50301-R
Profile knife, TC	50 x 30 x 2 mm, profiled, HW 04	72546-6-50041-R
Blank, TC	50 x 30 x 2 mm, unprofiled, HW 02	72530-6-50300-R
Blank , TC	50 x 30 x 2 mm, unprofiled, HW 04	72531-6-50300-R
Torx clamping screw	M 4 x 5,9, extra large head, T15	39076-0-04000-R
Torx key	T15, with handle	39077-0-04015-2

HW 02 = standard grade
HW 04 = for solid wood

Examples of profiles (1:1)

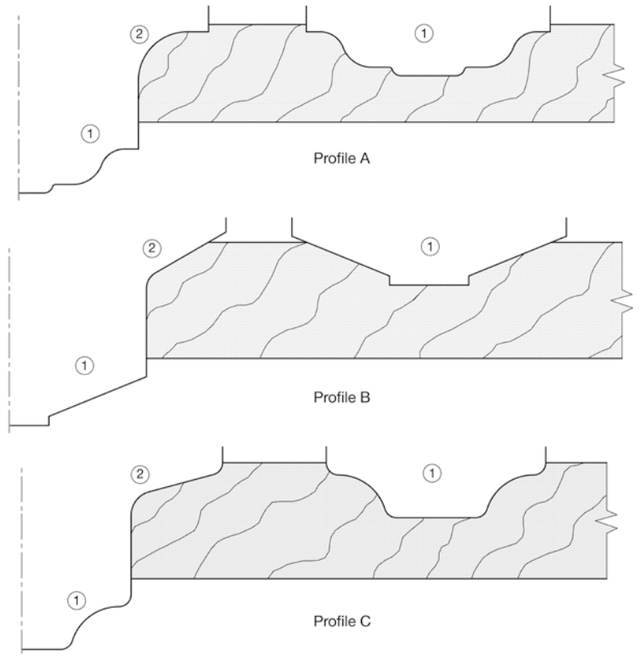

R. Milling Cutter & C. Cutters

RAPIDO Bottom Cutting Profiler for TC knives Z2

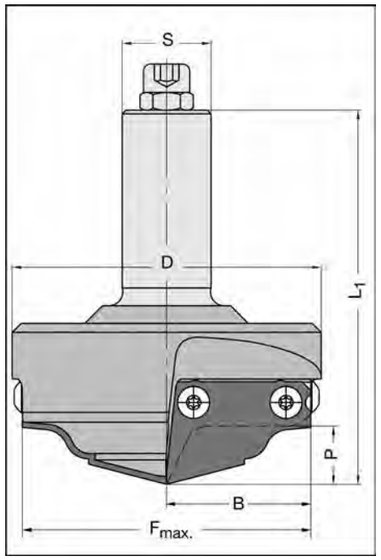

22547 without interchangeable TC knives

F_{max} mm	D mm	B mm	P mm	L_1 mm	Shank mm	Part-No.
Profiled body						
60	70	30	16	100	20 x 55 m. E. M 8	22547-0-60005-R
60	70	30	16	100	25 x 55 m. E. M 8	22547-0-60006-R
80	90	40	16	105	25 x 55 m. E. M 8	22547-0-80006-R
Unprofiled body						
60	70	30	-	98	20 x 55 m. E. M 8	22547-0-70005-R
60	70	30	-	98	25 x 55 m. E. M 8	22547-0-70006-R
80	90	40	-	103	25 x 55 m. E. M 8	22547-0-90006-R

Technical details

Tool body for two profiled interchangeable TC knives, with shear angle. Right-hand rotation.
For mechanical feed. The interchangeable knives can be profiled according to illustrations below.
T**he profile of tool body will be adapted in each case to the appropriate profile of knife**.
The interchangeable knives have to be ordered **in addition.**

Application

For cutting wide profile grooves, rosettes in furniture and door production, as well as for cutting flat, deep profiles, such as panel raising operations on CNC machines.

R.P.M. $_{max.}$ = 16 000 (F_{max} = 60 mm)
R.P.M. $_{max.}$ = 12 000 (F_{max} = 80 mm)

Quantity discounts, ordering same profile: 5 - 9 pcs. = 12%, up from 10 pcs. = 25 %.
Template costs: see page 7.32

Spare parts / Accessories		Part-No.
Profile knife, TC	30 x 30 x 2 mm, profiled, HW 02	72547-6-30301-R
Profile knife, TC	40 x 30 x 2 mm, profiled, HW 02	72547-6-40301-R
Profile knife, TC	30 x 30 x 2 mm, profiled, HW 04	72547-6-30041-R
Profile knife, TC	40 x 30 x 2 mm, profiled, HW 04	72547-6-40041-R
Blank, TC	30 x 30 x 2 mm, unprofiled, HW 02	72530-6-30300-R
Blank, TC	40 x 30 x 2 mm, unprofiled, HW 02	72530-6-40300-R
Blank, TC	30 x 30 x 2 mm, unprofiled, HW 04	72531-6-30300-R
Blank, TC	40 x 30 x 2 mm, unprofiled, HW 04	72531-6-40300-R
Torx clamping screw	M 4 x 5,9, extra-large head, T15	39076-0-04000-R
Torx key	T15, with handle	39077-0-04015-2

HW 02 = standard grade
HW 04 = for solid wood

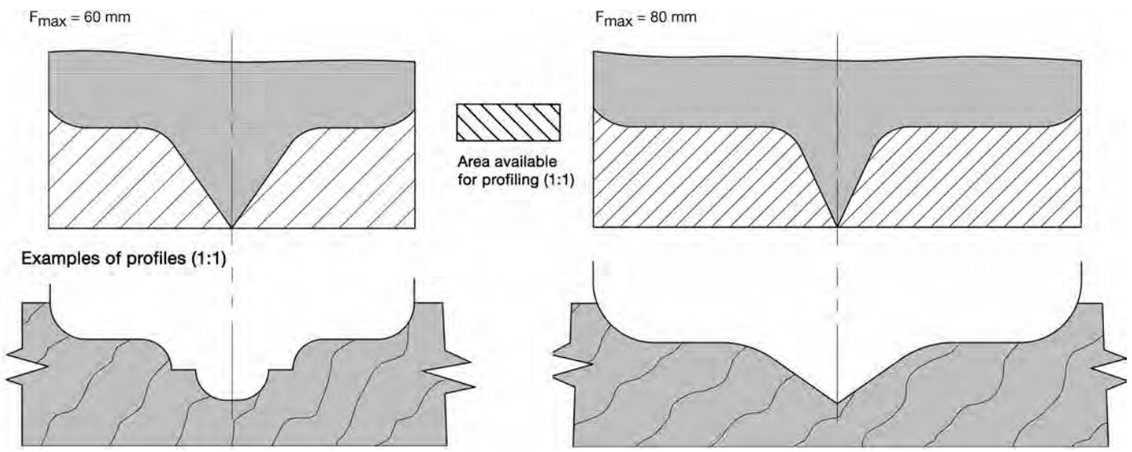

RAPIDO Profile Cutter for TC knives Z2

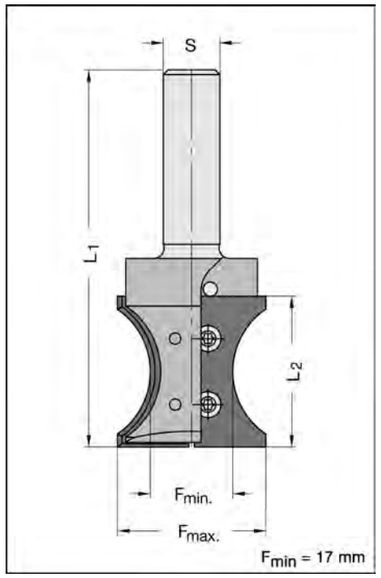

22529 without interchangeable TC knives

F_{max} mm	F_{min} mm	L_2 mm	f. knives No.	L_1 mm	Shank mm	Part-No.
Profiled body						
31,5	17	32	24	80	12 x 40	22529-0-00002-R
31,5	17	32	24	80	½" x 40	22529-0-00009-R
Unprofiled body						
31,5	17	32	24	78	12 x 40	22529-0-31502-R
31,5	17	32	24	78	½" x 40	22529-0-31509-R

Technical details

Tool body for two profiled interchangeable TC knives. Ramp plunge cutting operations also possible. Right-hand rotation. For mechanical feed. The interchangeable TC knives can be profiled according to illustrations below.
The profile of tool body will be adapted in each case to the appropriate profile of knife.
The interchangeable knives have to be ordered **in addition.**

Application

To produce decorative edge profiles in furniture and door production, especially for narrow radii, on stationary routers or CNC machines.

R.P.M. $_{max.}$ = 18 000

Quantity discounts, ordering same profile: 5 - 9 pcs. = 12%, up from 10 pcs. = 25 %.
Template costs: see page 7.32

Spare parts / Accessories		Part-No.
Profile knife, TC	32 x 15 x 1,5 mm, profiled, HW 02	72529-6-32151-R
Blank, TC	32 x 15 x 1,5 mm, unprofiled, HW 02	72529-6-32150-R
Torx clamping screw	M 3 x 4, T 9	39081-0-03040-R
Torx key	T 9, with handle	39077-0-03009-2

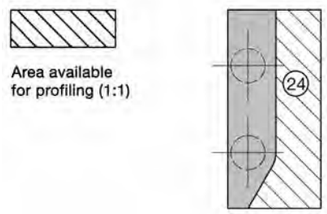

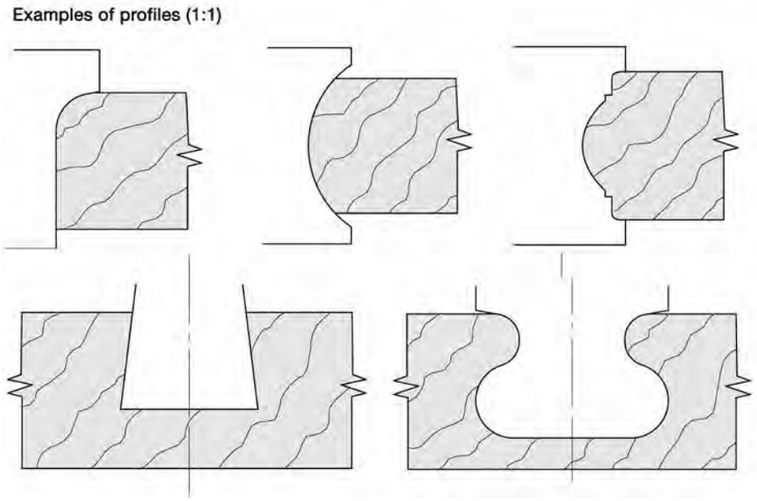

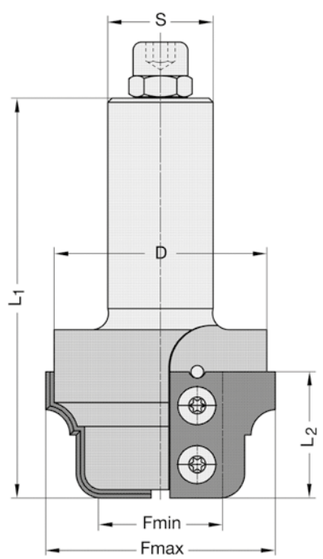

F_{min} = 31 mm
(D = 62 mm)

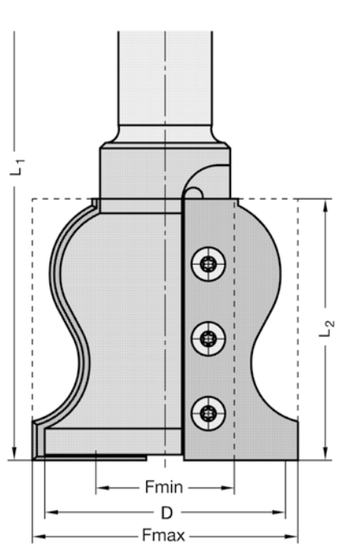

F_{min} = 37 mm (D = 66 mm)
F_{min} = 39 mm (D = 68 mm)

22530 without interchangeable TC knives

F_{max} mm	D mm	L_2 mm	f. knives No.	L_1 mm	Shank mm	Part-No.
Profiled body						
45/55/65*	-	25	22/23/25	90	¾" x 55 m. E. M 8	22530-0-55254-R
45/55/65*	-	25	22/23/25	90	20 x 55 m. E. M 8	22530-0-55255-R
45/55/65*	-	25	22/23/25	90	25 x 55 m. E. M 8	22530-0-55256-R
45/55/65*	-	30	1/2/3	95	¾" x 55 m. E. M 8	22530-0-55304-R
45/55/65*	-	30	1/2/3	95	20 x 55 m. E. M 8	22530-0-55305-R
45/55/65*	-	30	1/2/3	95	25 x 55 m. E. M 8	22530-0-55306-R
45/55/65*	-	40	4/5/6	105	¾" x 55 m. E. M 8	22530-0-55404-R
45/55/65*	-	40	4/5/6	105	20 x 55 m. E. M 8	22530-0-55405-R
45/55/65*	-	40	4/5/6	105	25 x 55 m. E. M 8	22530-0-55406-R
45/55/65*	-	50	7/8/9	115	¾" x 55 m. E. M 8	22530-0-55504-R
45/55/65*	-	50	7/8/9	115	20 x 55 m. E. M 8	22530-0-55505-R
45/55/65*	-	50	7/8/9	115	25 x 55 m. E. M 8	22530-0-55506-R
71	66	60	27	130	¾" x 55 m. E. M 8	22530-0-71604-R
71	66	60	27	130	20 x 55 m. E. M 8	22530-0-71605-R
71	66	60	27	130	25 x 55 m. E. M 8	22530-0-71606-R
71	66	70	19	140	¾" x 55 m. E. M 8	22530-0-71704-R
71	66	70	19	140	20 x 55 m. E. M 8	22530-0-71705-R
71	66	70	19	140	25 x 55 m. E. M 8	22530-0-71706-R
73	68	100	28	170	¾" x 55 m. E. M 8	22530-0-73104-R
73	68	100	28	170	20 x 55 m. E. M 8	22530-0-73105-R
73	68	100	28	170	25 x 55 m. E. M 8	22530-0-73106-R
Unprofiled body						
45/55/65*	62	25	22/23/25	88	25 x 55 m. E. M 8	22530-0-52256-R
45/55/65*	62	30	1/2/3	93	25 x 55 m. E. M 8	22530-0-52306-R
45/55/65*	62	40	4/5/6	103	25 x 55 m. E. M 8	22530-0-52406-R
45/55/65*	62	50	7/8/9	113	25 x 55 m. E. M 8	22530-0-52506-R
71	66	60	27	128	25 x 55 m. E. M 8	22530-0-66606-R
71	66	70	19	138	25 x 55 m. E. M 8	22530-0-66706-R
73	68	100	28	168	25 x 55 m. E. M 8	22530-0-68106-R

* The tool body can be profiled for knives of H = 20, 25 or 30 mm (No. 1/2/3) resulting in a F_{max} = 45, 55 or 65 mm respectively.

Technical details
Tool body for two profiled interchangeable TC knives. Also designed for bottom-cut. Right-hand rotation.
For mechanical feed.

The profile of tool body will be adapted in each case to the appropriate profile of knife.
The interchangeable knives have to be ordered **in addition** (see page 7.11).

Application
For cutting decorative profiles in furniture and door production, as well as for ceiling or wall panelling, etc. on stationary routers or CNC machines.

Spare parts / Accessories		Part-No.
Torx clamping screw	M 4 x 5,9, extra-large head,T15	39076-0-04000-R
Torx key	T15, with handle	39077-0-04015-2

For F_{min} < 31 mm please use body No. 22532/22534 page 4.43 (back screw fixing) or No. 22529 page 4.41.

Maximum R.P.M.

F_{max}	L_2 = mm						
mm	25	30	40	50	60	70	100
45	18000	18000	18000	17300	-	-	-
55	18000	18000	15600	13800	-	-	-
65	15200	15200	13300	12000	-	-	-
71	-	-	-	-	12000	11000	-
73	-	-	-	-	-	-	9000

back screw fixing

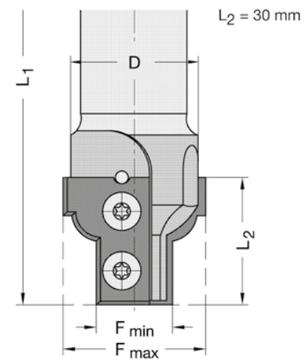

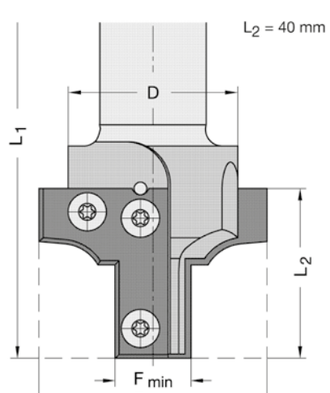

F_{min} = 19 mm

For F_{min} > 30 mm please use No. 22530, (front screw fixing)

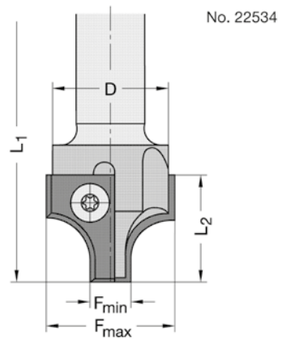

F_{min} = 10 mm

22532 without interchangeable T.C. knives

F_{max} mm	D mm	L_2 mm	f. knives No.	L_1 mm	Shank mm	Part-No.
Profiled body						
34	31	30	1	81	½" x 40	22532-0-34309-R
34	31	30	1	96	25 x 55 m. E. M 8	22532-0-34306-R
53	50	40	18	91	12 x 40	22532-0-44402-R
53	50	40	18	91	½" x 40	22532-0-44409-R
53	50	40	18	106	¾" x 55 m. E. M 8	22532-0-44404-R
53	50	40	18	106	25 x 55 m. E. M 8	22532-0-44406-R
Unprofiled body						
34	31	30	1	94	25 x 55 m. E. M 8	22532-0-31306-R
53	50	40	18	104	¾" x 55 m. E. M 8	22532-0-41404-R
53	50	40	18	104	25 x 55 m. E. M 8	22532-0-41406-R

22534 without interchangeable TC knives

F_{max} mm	D mm	L_2 mm	f. knives No.	L_1 mm	Shank mm	Part-No.
Profiled body						
30	28	25	10	74	12 x 40	22534-0-30252-R
30	28	25	10	74	½" x 40	22534-0-30259-R
30	28	25	10	86	¾" x 55 m. E. M 8	22534-0-30254-R
30	28	25	10	86	25 x 55 m. E. M 8	22534-0-30256-R
Unprofiled body						
30	28	25	10	74	12 x 40	22534-0-28002-R
30	28	25	10	74	½" x 40	22534-0-28009-R
30	28	25	10	86	¾" x 55 m. E. M 8	22534-0-28004-R
30	28	25	10	86	25 x 55 m. E. M 8	22534-0-28006-R

Technical details
Tool body for two profiled interchangeable TC knives. Also designed for bottom-cut. Right-hand rotation.
For mechanical feed.
The profile of tool body will be adapted in each case to the appropriate profile of knife.

Application
For cutting decorative profiles in furniture and door production, as well as for ceiling and wall panelling, etc. on stationary routers and CNC machines. Can also be used for ramp plunge cutting.

R.P.M. $_{max.}$ = 18 000 (F_{max} = 30/34 mm)
R.P.M. $_{max.}$ = 12 000 (F_{max} = 53 mm)

Spare parts / Accessories		Part-No.
Torx clamping screw	M 4 x 5,9, extra-large head, T15	39076-0-04000-R
Torx key	T15, with handle	39077-0-04015-2

Please order the interchangeable knives **in addition** (page 7.11 / 7.12).

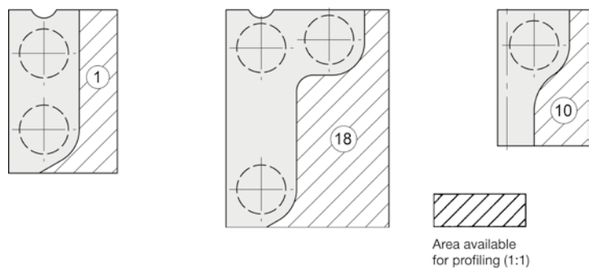

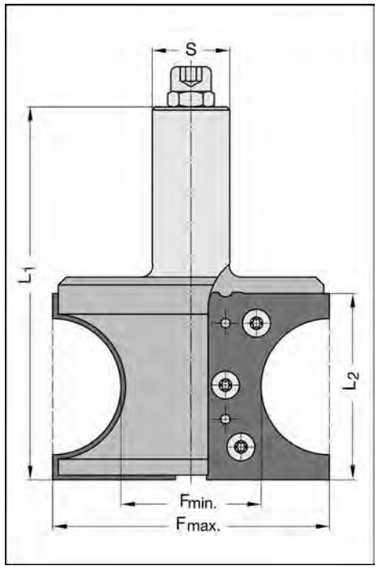

22530-90 without interchangeable TC knives

F_{max} mm	F_{min} mm	L_2 mm	f. knives No.	L_1 mm	Shank mm	Part-No.
Profiled body						
90	40	60	30	125	¾" x 55 m. E. M 8	22530-0-90004-R
90	40	60	30	125	20 x 55 m. E. M 8	22530-0-90005-R
90	40	60	30	125	25 x 55 m. E. M 8	22530-0-90006-R
Unprofiled body						
87	40	60	30	123	¾" x 55 m. E. M 8	22530-0-87004-R
87	40	60	30	123	20 x 55 m. E. M 8	22530-0-87005-R
87	40	60	30	123	25 x 55 m. E. M 8	22530-0-87006-R

Quantity discounts, ordering same profile: 5 - 9 pcs. = 12%, up from 10 pcs. = 25 %.
Template costs: please see page 7.32

Spare parts / Accessories		Part-No.
Profile knife, TC	60 x 40 x 2 mm, profiled, HW 02	72534-6-60401-R
Blank, TC	60 x 40 x 2 mm, unprofiled, HW 02	72534-6-60400-R
Torx clamping screw	M 4 x 5,9, extra-large head, T15	39076-0-04000-R
Torx key	T15, with handle	39077-0-04015-2

Technical details

Tool body for two profiled interchangeable TC knives, **with synthetic fit.** Right-hand rotation. For mechanical feed. The interchangeable TC knives can be profiled according adjacent illustrations.

The profile of tool body will be adapted in each case to the appropriate profile of the knife.
The interchangeable knives have to be ordered **in addition**.

Application

For cutting deep, closed profiles, on both sides e.g. bull nose profiles up to R = 25 mm.

R.P.M. $_{max.}$ = 12 000

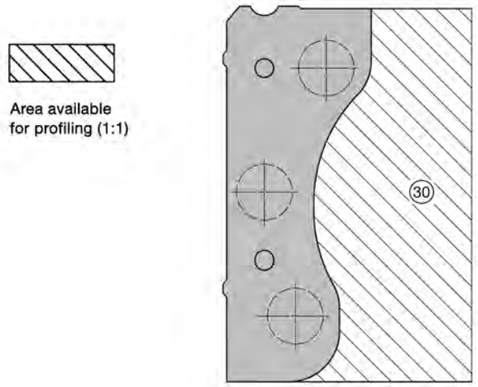

Examples of profiles (1:1)

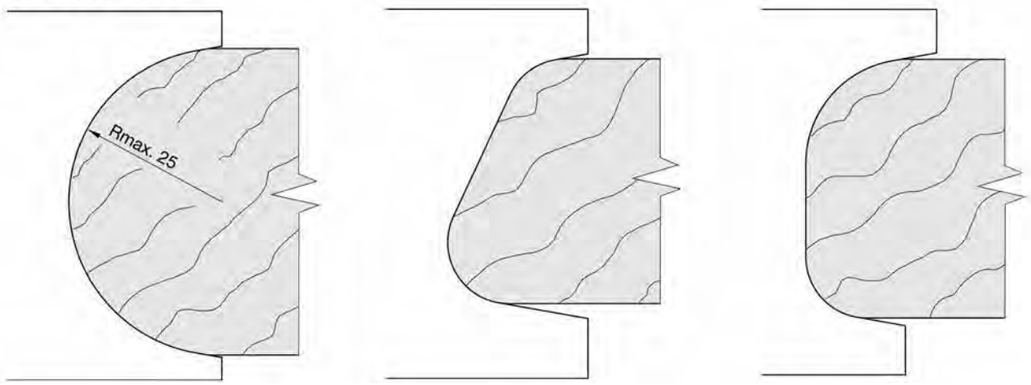

RAPIDO Profile Cutters for TC knives Z2

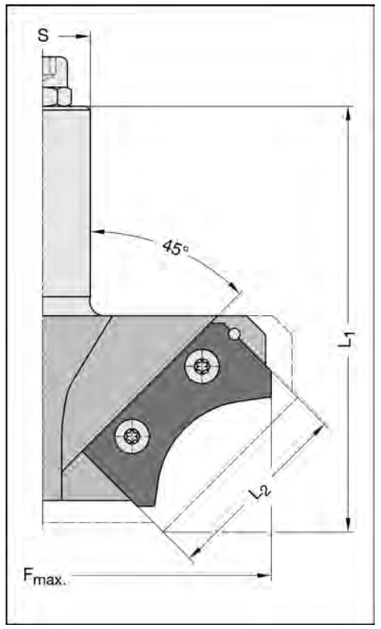

22538-45 without interchangeable TC knives

F_{max} mm	R mm	L_2 mm	f. knives No.	L_1 mm	Shank mm	Part-No.
Body profiled for rounding over knives						
100	15-20	40	-	98	20 x 55 m. E. M 8	22538-0-00205-R
100	15-20	40	-	98	25 x 55 m. E. M 8	22538-0-00206-R
Body profiled, special profiles						
105/110*	-	40	5b/6b	108	20 x 55 m. E. M 8	22538-0-11005-R
105/110*	-	40	5b/6b	108	25 x 55 m. E. M 8	22538-0-11006-R
125/130*	-	50	8b/9b	110	20 x 55 m. E. M 8	22538-0-13005-R
125/130*	-	50	8b/9b	110	25 x 55 m. E. M 8	22538-0-13006-R
Unprofiled body						
105/110*	-	40	5b/6b	106	20 x 55 m. E. M 8	22538-0-10505-R
105/110*	-	40	5b/6b	106	25 x 55 m. E. M 8	22538-0-10506-R
125/130*	-	50	8b/9b	108	20 x 55 m. E. M 8	22538-0-12505-R
125/130*	-	50	8b/9b	108	25 x 55 m. E. M 8	22538-0-12506-R

* Knives with H = 25 mm or 30 mm can be used, for special profiles which means for B = 40 mm $F_{max.}$ = 105 or 110 mm and B = 50 mm $F_{max.}$ = 125 or 130 mm.

Technical details

Tool body for two profiled interchangeable TC knives, with shear angle. Right-hand rotation.
For mechanical feed.
The profile of tool body will be adapted in each case to the appropriate profile of knives.
The interchangeable knives have to be ordered **in addition**.

Application

For cutting decorative profiles in furniture and door production, as well as for ceiling and wall panelling, etc. on stationary routers and CNC machines. Especially for cutting large rounded over profiles.

R.P.M. $_{max.}$ = 11 500 (F_{max} = 100 - 110 mm)
R.P.M. $_{max.}$ = 9 000 (F_{max} = 120 - 130 mm)

Quantity discounts, ordering same profile: 5 - 9 pcs. = 12%, up from 10 pcs. = 25 %.
Template costs: see page 7.32

Spare parts / Accessories		Part-No.
Rounding over knife, TC	40 x 25 x 2 mm, R = 15 mm, standard pr., HW 02	72538-6-00015-R
Rounding over knife, TC	40 x 25 x 2 mm, R = 20 mm, standard pr., HW 02	72538-6-00020-R
Rounding over knife, TC	50 x 25 x 2 mm, R = 25 mm, standard pr., HW 02	72538-6-00025-R
Rounding over knife, TC	50 x 25 x 2 mm, R = 30 mm, standard pr., HW 02	72538-6-00030-R
Profile knife, TC	40 x 25 x 2 mm, special profiled, HW 02	72530-6-40251-R
Profile knife, TC	40 x 30 x 2 mm, special profiled, HW 02	72530-6-40301-R
Profile knife, TC	50 x 25 x 2 mm, special profiled, HW 02	72530-6-50251-R
Profile knife, TC	50 x 30 x 2 mm, special profiled, HW 02	72530-6-50301-R
Blank, TC	40 x 25 x 2 mm, unprofiled, HW 02	72530-6-40250-R
Blank, TC	40 x 30 x 2 mm, unprofiled, HW 02	72530-6-40300-R
Blank, TC	50 x 25 x 2 mm, unprofiled, HW 02	72530-6-50250-R
Blank, TC	50 x 30 x 2 mm, unprofiled, HW 02	72530-6-50300-R
Torx clamping screw	M 4 x 5,9, extra-large head, T15	39076-0-04000-R
Torx key	T15, with handle	39077-0-04015-2

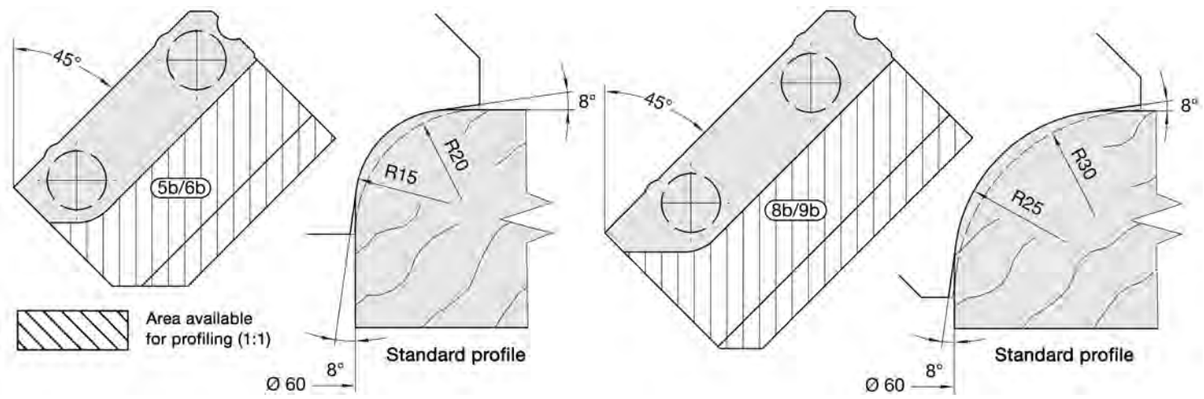

R. Milling Cutter & C. Cutters

RAPIDO Profile Cutters for TC knives Z2

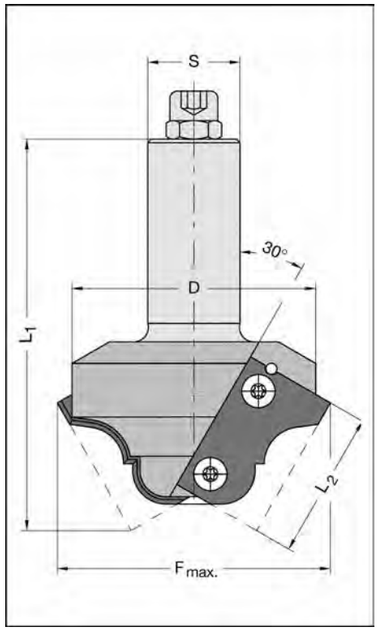

22538-30 without interchangeable TC knives

F_{max} mm	D mm	L_2 mm	f. knives No.	L_1 mm	Shank mm	Part-No.
Profiled body						
82/87*	-	40	5a/6a	104	¾" x 55 m. E. M 8	22538-0-74404-R
82/87*	-	40	5a/6a	104	25 x 55 m. E. M 8	22538-0-74406-R
Unprofiled body						
82/87*	83	40	5a/6a	102	¾" x 55 m. E. M 8	22538-0-70404-R
82/87*	83	40	5a/6a	102	25 x 55 m. E. M 8	22538-0-70406-R

*For tool body of D = 83 mm either knives of H = 25 or 30 mm can be used result in F_{max} = 82 or 87 mm, respectively.

Technical details
Tool body for two profiled interchangeable TC knives. Shear angle design. Also designed for bottom-cut. Right-hand rotation. For mechanical feed.
The profile of tool body will be adapted in each case to the appropriate profile of knife.
The interchangeable knives have to be ordered **in addition**.

Application
For cutting decorative profiles in furniture and door production, as well as for ceiling and wall panelling, etc. on stationary routers and CNC machines. Especially when cutting large deep profiles.

R.P.M. $_{max.}$ = 11 000

Quantity discounts, ordering same profile: 5 - 9 pcs. = 12%, up from 10 pcs. = 25 %.
Template costs: see page 7.32

Spare parts / Accessories		Part-No.
Profile knife, TC	40 x 30 x 2 mm, profile 1, standard profile, HW 02	72538-6-00001-R
Profile knife, TC	40 x 30 x 2 mm, profile 2, standard profile, HW 02	72538-6-00002-R
Profile knife, TC	40 x 25 x 2 mm, special profile, profiled, HW 02	72530-6-40251-R
Profile knife, TC	40 x 30 x 2 mm, special profile, profiled, HW 02	72530-6-40301-R
Blank, TC	40 x 25 x 2 mm, unprofiled, HW 02	72530-6-40250-R
Blank, TC	40 x 30 x 2 mm, unprofiled, HW 02	72530-6-40300-R
Torx clamping screw	M 4 x 5,9, extra-large head, T15	39076-0-04000-R
Torx key	T15, with handle	39077-0-04015-2

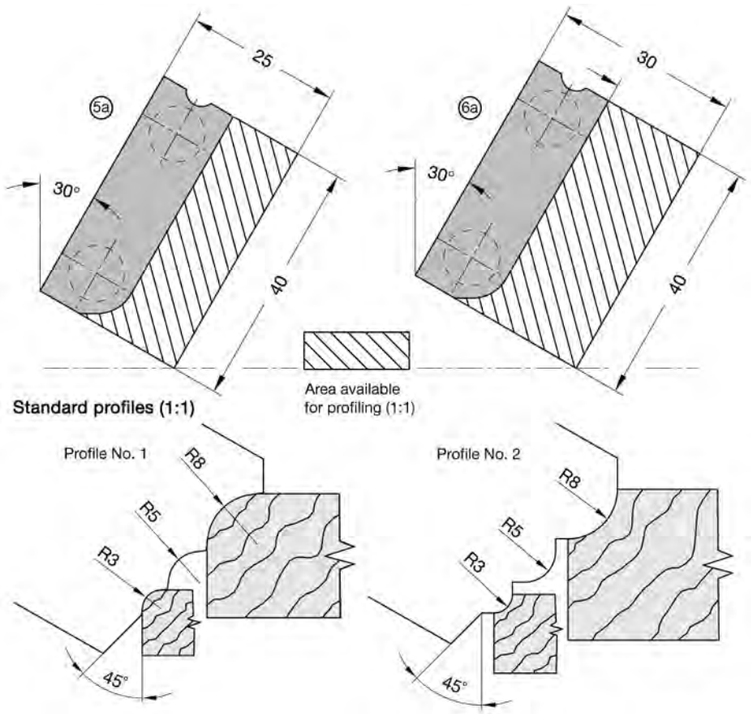

RAPIDO Profile Cutter for TC knives Z2

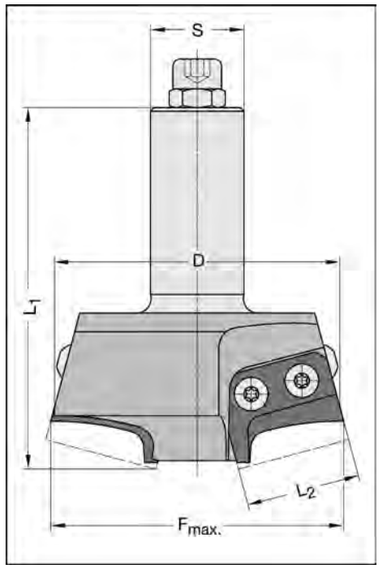

22537 without interchangeable TC knives

F_{max} mm	D mm	L_2 mm	f. knives No.	L_1 mm	Shank mm	Part-No.
Profiled body						
80	78	30	33	95	20 x 55 m. E. M 8	22537-0-80305-R
Unprofiled body						
81	78	30	33	93	20 x 55 m. E. M 8	22537-0-78305-R

Technical details
Tool body for two profiled interchangeable TC knives, with shear angle. Right-hand rotation. For mechanical feed.
The profile of tool body will be adapted in each case to the appropriate profile of knives.
The interchangeable knives have to be ordered **in addition.**

Application
Especially for cutting large rounded over profiles, as well as for ceiling and wall panelling, etc. on stationary routers and CNC machines.

R.P.M. $_{max.}$ = 14 000

Quantity discounts, ordering same profile: 5 - 9 pcs. = 12%, up from 10 pcs. = 25 %.
Template costs: see page 7.32

Spare parts / Accessories		Part-No.
Profile knife, TC	30 x 25 x 2 mm, special profile, HW 02	72537-6-30251-R
Blank, TC	30 x 25 x 2 mm, unprofiled, HW 02	72530-6-30250-R
Torx clamping screw	M 4 x 5,9, extra-large head, T15	39076-0-04000-R
Torx key	T15, with handle	39077-0-04015-2

HW 02 = standard grade

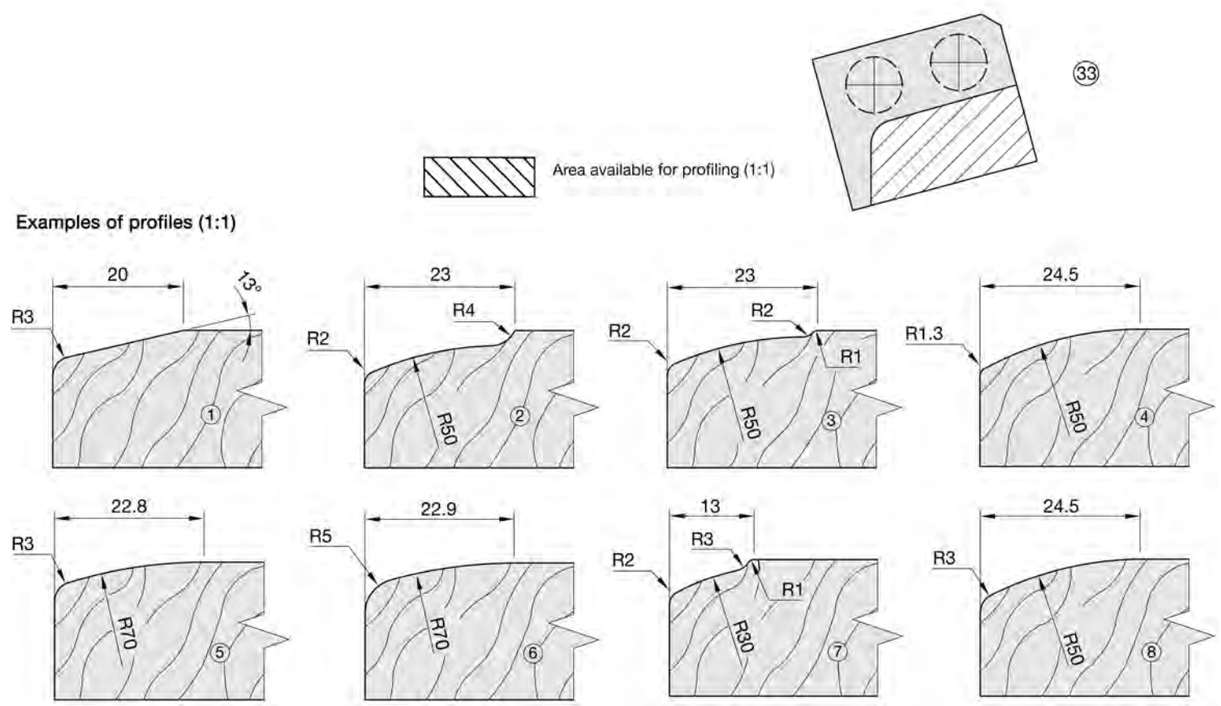

R. Milling Cutter & C. Cutters

RAPIDO Profile Cutters for TC knives Z2

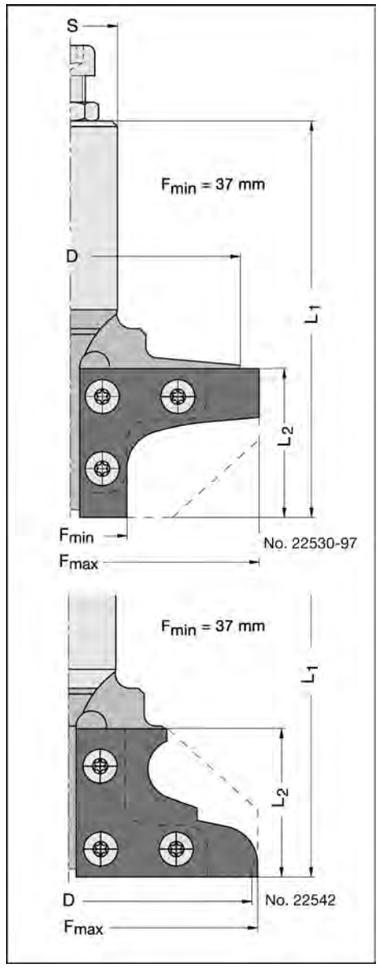

22530-97 without interchangeable TC knives

F_{max} mm	D mm	L_2 mm	f. knives No.	L_1 mm	Shank mm	Part-No.
Profiled body						
105	102	36	20	104	¾" x 55 m. E. M 8	22530-0-10004-R
105	102	36	20	104	20 x 55 m. E. M 8	22530-0-10005-R
105	102	36	20	104	25 x 55 m. E. M 8	22530-0-10006-R
Unprofiled body						
105	102	36	20	102	¾" x 55 m. E. M 8	22530-0-97404-R
105	102	36	20	102	20 x 55 m. E. M 8	22530-0-97405-R
105	102	36	20	102	25 x 55 m. E. M 8	22530-0-97406-R

22542 without interchangeable TC knives

F_{max} mm	D mm	L_2 mm	f. knives No.	L_1 mm	Shank mm	Part-No.
Profiled body						
105	102	36	21	105	¾" x 55 m. E. M 8	22542-0-10004-R
105	102	36	21	105	20 x 55 m. E. M 8	22542-0-10005-R
105	102	36	21	105	25 x 55 m. E. M 8	22542-0-10006-R
Unprofiled body						
105	102	36	21	103	¾" x 55 m. E. M 8	22542-0-97404-R
105	102	36	21	103	20 x 55 m. E. M 8	22542-0-97405-R
105	102	36	21	103	25 x 55 m. E. M 8	22542-0-97406-R

Spare parts / Accessories		Part-No.
Profile knife, TC	40 x 50 x 2 mm, profiled, knife no. 20, HW 02	72530-6-40501-R
Profile knife, TC	40 x 50 x 2 mm, profiled, knife no. 21, HW 02	72542-6-40501-R
Blank, TC	40 x 50 x 2 mm, unprofiled, no. 20 / 21, HW 02	72530-6-40500-R
Torx clamping screw	M 4 x 5,9, extra-large head, T15	39076-0-04000-R
Torx key	T15, with handle	39077-0-04015-2

Technical details
Tool body for two profiled interchangeable TC knives, with shear angle. Right-hand rotation. For mechanical feed.
The profile of tool body will be adapted in each case to the appropriate profile of knife.
The interchangeable knives have to be ordered **in addition**.

Application
Especially for cutting deep, large decorative profiles in furniture and door production, as well as for ceiling or wall panelling, etc. on stationary routers and CNC machines.

R.P.M. $_{max.}$ = 8 000

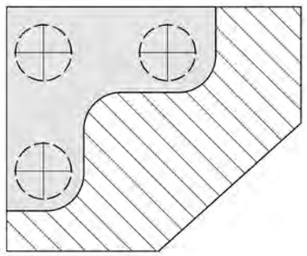

20

Examples of profiles (1:1) for No. 22530-97

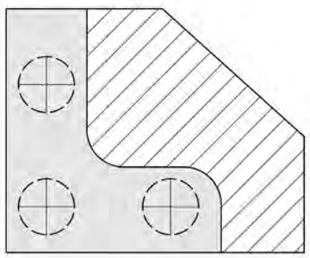

21

Examples of profiles (1:1) for No. 22542

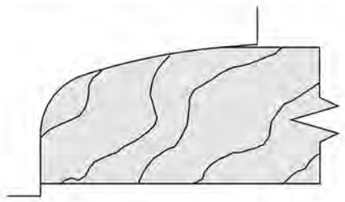

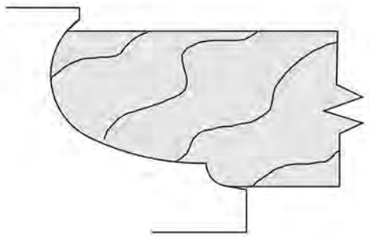

RAPIDO Profile Cutter for TC knives Z2

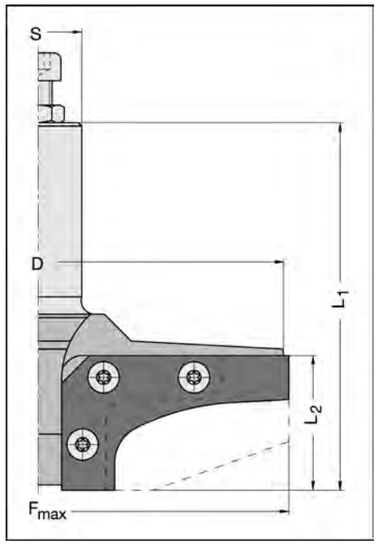

22440 without interchangeable TC knives

F_{max} mm	D mm	L_2 mm	f. knives No.	L_1 mm	Shank mm	Part-No.
Profiled body						
144	141	38	29	107	25* x 55 m. E. M 8	22440-0-14406-R
Unprofiled body						
144	141	38	29	105	25* x 55 m. E. M 8	22440-0-14106-R

* For safety reasons, shank of 25 mm cannot be reduced.

Technical details
Tool body for two profiled interchangeable TC knives, with shear angle. Right-hand rotation. For mechanical feed.

The profile of tool body will be adapted in each case to the appropriate profile of knife.
The interchangeable knives have to be ordered **in addition**.

Application
For panel raising operations on stationary routers and CNC machines, as well as for cutting flat exterior profiles.

R.P.M. $_{max.}$ = 6 000

Quantity discounts, ordering same profile: 5 - 9 pcs. = 12%, up from 10 pcs. = 25 %.
Template costs: see page 7.32

Spare parts / Accessories		Part-No.
Profile knife, TC	40 x 66 x 2 mm, profiled, HW 02	72440-6-40661-R
Blank, TC	40 x 66 x 2 mm, unprofiled, HW 02	72440-6-40660-R
Torx clamping screw	M 4 x 5,9, extra-large head, T15	39076-0-04000-R
Torx key	T15, with handle	39077-0-04015-2

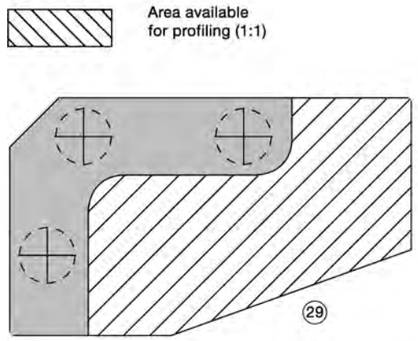

29

Examples of profiles (1:1)

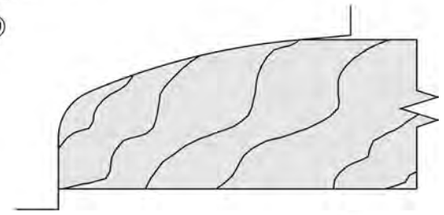

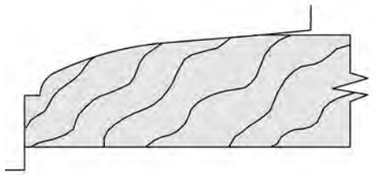

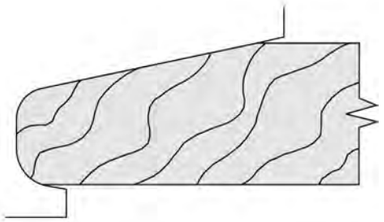

R. Milling Cutter & C. Cutters

RAPIDO Profile Cutter for TC knives Z2+2

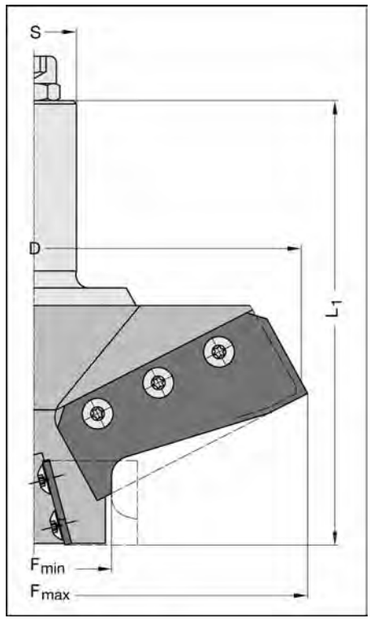

22442 without interchangeable TC knives

F_{max} mm	D mm	F_{min} mm	f. knives No.	L_1 mm	Shank mm	Part-No.
Profiled body						
160	157	38	31	131	25* x 55 m. E. M 8	22442-0-16006-R
Unprofiled body						
160	157	38	31	129	25* x 55 m. E. M 8	22442-0-15706-R

* For safety reasons, shank of 25 mm cannot be reduced.

Quantity discounts, ordering same profile: 5 to 9 pcs = 12 %, up from 10 pcs = 25 %.
Template costs: see page 7.32

Spare parts / Accessories		Part-No.	PU
Profile knife, TC	25 x 25 x 2 mm, profilied, HW 02	72442-6-25251-R	
Profile knife, TC	70 x 30 x 2 mm, profiled, HW 04	72442-6-70301-R	
Blank, TC	25 x 25 x 2 mm, unprofiled, HW 02	72530-6-25250-R	
Blank, TC	70 x 30 x 2 mm, unprofiled, HW 04	72530-6-70300-R	
Torx clamping screw	M 4 x 5,9, extra-large head, T15	39076-0-04000-R	
Torx key	T15, with handle	39077-0-04015-2	

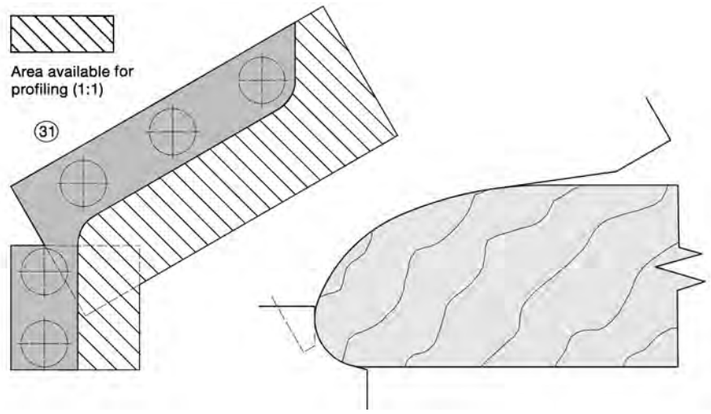

Technical details
Tool body made of high-quality, light metal. For two each upper and lower, staggered profiled interchangeable TC knives, with shear angle. Right-hand rotation. For mechanical feed.

The profile of the tool body will be adapted in each case to the appropriate profile of knife.
The interchangeable knives have to be ordered **in addition.**

Application
Especially for large, deep, closed profile, e.g. table edges. Optimum cutting edge geometry on top and bottom for perfect surface quality through staggered knife position, even across the grain.

R.P.M.$_{max.}$ = 5 000

Examples of profiles (1:1)

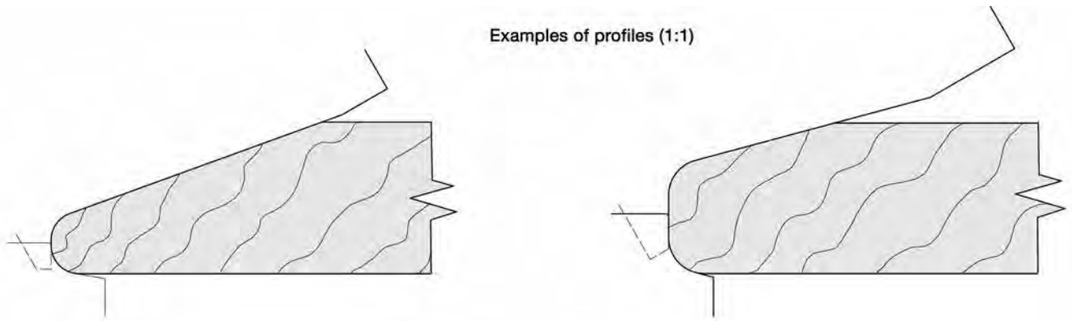

RAPIDO Raised Panel Cutters for TC knives Z2

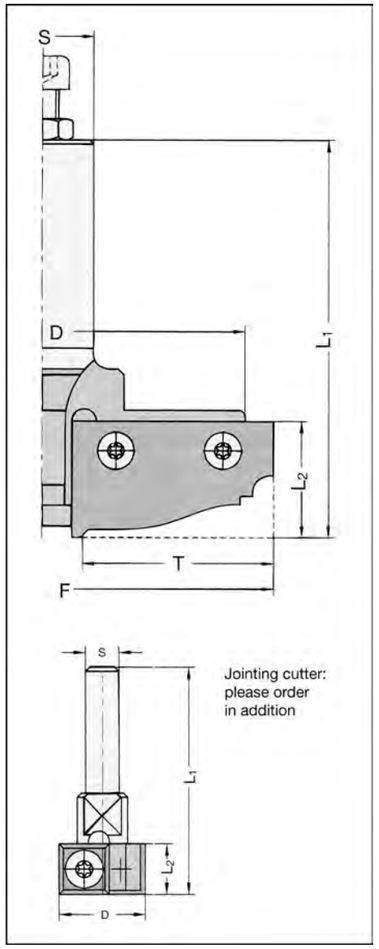

22438 without interchangeable TC knives

D mm	F mm	L_2 mm	L_1 mm	T mm	Shank mm	Part-No.
Profiled body						
108	112	28	97	46*	¾" x 55 m. E. M 8	22438-0-00004-R
108	112	28	97	46*	20 x 55 m. E. M 8	22438-0-00005-R
108	112	28	97	46*	25 x 55 m. E. M 8	22438-0-00006-R
Unprofiled body						
108	112	28	95	46*	¾" x 55 m. E. M 8	22438-0-10804-R
108	112	28	95	46*	20 x 55 m. E. M 8	22438-0-10805-R
108	112	28	95	46*	25 x 55 m. E. M 8	22438-0-10806-R

* When using jointing cutter
Interchangeable knives have to be ordered **in addition.**

Quantity discounts, ordering same profile: 5 - 9 pcs. = 12%, up from 10 pcs. = 25 %.
Template costs: see page 7.32

Spare parts / Accessories		Part-No.	PU
Profile knife, TC	50 x 30 x 2 mm, profiled, HW 02	72530-6-50301-R	
Blank, TC	50 x 30 x 2 mm, unprofiled, HW 02	72530-6-50300-R	
Jointing cutter	ø 22 x 12 mm, S = 8 mm (till middle 97)	22263-5-22012-R	
Jointing cutter	ø 22 x 12 mm, S = 6 mm (since middle 97)	22261-5-22012-R	
Interch. TC tip	12 x 12 x 1,5 mm	72014-6-01201-0	
Covering bolt	for bottom location hole	39491-0-00000-R	
Torx clamping screw	M 4 x 5,9, extra-large head, T15	39076-0-04000-R	
Torx key	T15, with handle	39077-0-04015-2	
Clamping screw	M 4 x 20 ISO 4762 (for jointing cutter)	39165-0-04020-R	
Key with T-handle	SW 3 (for jointing cutter)	39140-0-00302-0	

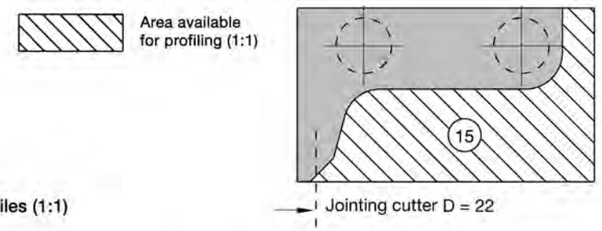

Technical details
Tool body for two interchangeable TC panel raising knives, for free profiling within the area available for profiling.

The profile of the tool body will be adapted in each case to the appropriate profile of knife.

With bottom location hole to take the jointing cutter. Supplied with mounted covering bolt. Right-hand rotation. For mechanical feed.

Application
For panel raising operations on CNC machines, as well as for cutting flat, deep exterior profiles. Also good for jointing simultaneous, when used in conjunction with the jointing cutter No. 22261.

R.P.M.$_{max.}$ = 7 500

Examples of profiles (1:1)

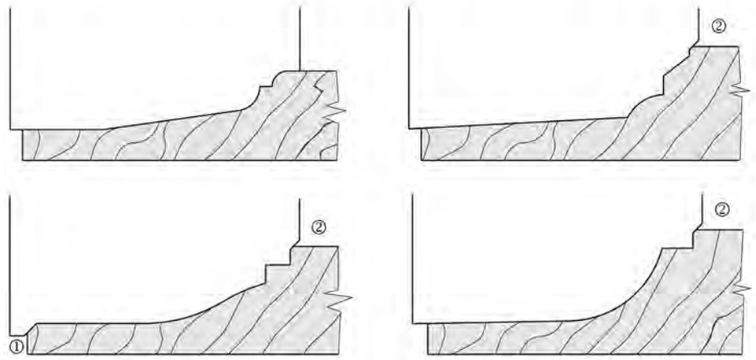

① = Optional on demand panel raising knives will be supplied bevel-ground or with radius

② = Bevel or radius for clean-cut edges

RAPIDO Glue Joint Cutters with TC knives Z2

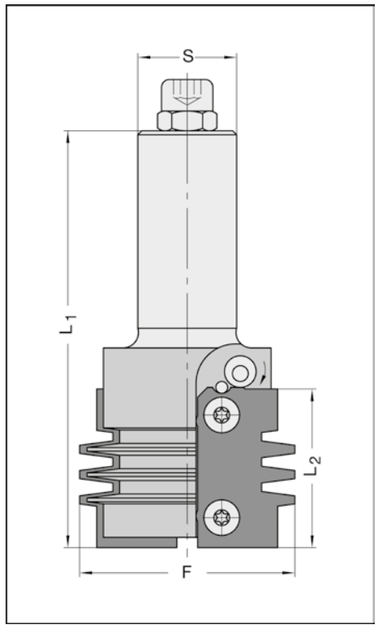

22560 compl. with interchangeable TC knives

Profile No.	h mm	F mm	L_2 mm	L_1 mm	Shank mm	Part-No.
2	15-28	55	30	95	25 x 55 m. E. M 8	22560-5-00206-R
3	25-38	55	40	105	25 x 55 m. E. M 8	22560-5-00306-R
5	35-58	71	60	130	25 x 55 m. E. M 8	22560-5-00506-R

For special profiles, use tool body No. 22530 (page 4.42).

Technical details
Tool body with two profiled interchangeable TC knives. Right-hand rotation. For mechanical feed.

Application
To produce glue joints with straight shoulders in different work piece thicknesses in soft and hardwood.

R.P.M.$_{max.}$ = 18 000 (profile no. 2)
R.P.M.$_{max.}$ = 15 600 (profile no. 3)
R.P.M.$_{max.}$ = 12 000 (profile no. 5)

Spare parts / Accessories		Part-No.
Interch. knives, TC	30 x 25 x 2 mm, profile 2, HW 02	72560-6-30002-R
Interch. knives, TC	40 x 25 x 2 mm, profile 3, HW 02	72560-6-40003-R
Interch. knives, TC	60 x 30 x 2 mm, profile 5, HW 02	72560-6-60005-R
Torx clamping screw	M 4 x 5,9, extra-large head, T15	39076-0-04000-R
Torx key	T15, with handle	39077-0-04015-2

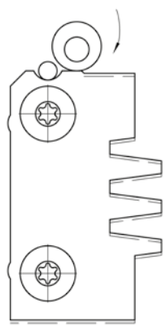

By adjusting the eccentric ring, the knife will slide downwards up to 0,2 mm.
This will reduce the strength of the glue joint connection which may be neccessary for certain types of wood.

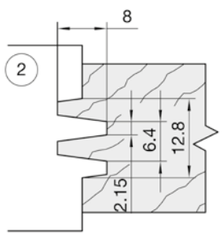

Standard profiles (1:1)

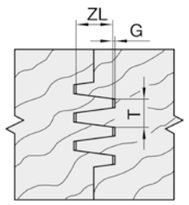

G = joint (standard)
T = pitch
ZL = finger length

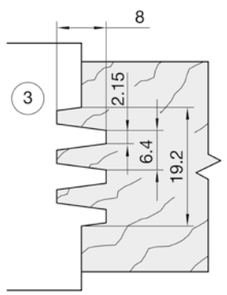

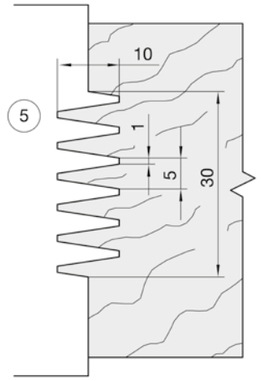

Handrail Cutters w. interch. TC knives Z2+2

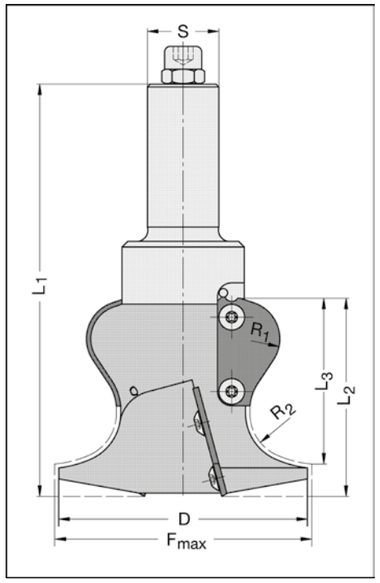

22565 shank 20 x 55 m. E. M 8

F_{max} mm	D mm	L_2 mm	L_3 mm	L_1 mm	Profile	Part-No.
Profiled body, with profiled TC knives						
90	87	76	62	145	1	22565-5-90105-R
90	87	76	59	145	2	22565-5-90205-R
90	87	76	63	145	3	22565-5-90305-R
Profiled body (special profiles), without TC knives						
100	97	75	-	145	-	22565-0-10005-R
Unprofiled body, without TC knives						
100	97	75	-	142	-	22565-0-09705-R

Technical details
Tool body with two+two staggered profiled interchangeable TC knives, with shear angle. Cutting on bottom and periphery. Right-hand rotation. For mechanical feed.

The profile of the tool body will be adapted in each case to the appropriate profile of knife.

Application
For cutting hand rails for stairs and side rails, for use on horizontal aggregates on CNC machines.

R.P.M. $_{max.}$ = 8 000

For applications in flank-clamping chucks (Weldon tool-holders), please state type of shank (see page 4.23), or enclose a detailed sketch or sample.

Quantity discounts, ordering same profile: 5 - 9 pcs. = 12%, up from 10 pcs. = 25 %.
Template costs: see page 7.32

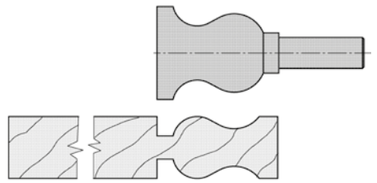

Spare parts / Accessories		Part-No.
Profile knife, TC	40 x 25 x 2 mm, profile 1 top, HW 02	72565-6-40001-1
Profile knife, TC	40 x 50 x 2 mm, profile 1 bottom, HW 02	72565-6-40001-2
Profile knife, TC	40 x 25 x 2 mm, profile 2 top, HW 02	72565-6-40002-1
Profile knife, TC	40 x 50 x 2 mm, profile 2 bottom, HW 02	72565-6-40002-2
Profile knife, TC	40 x 25 x 2 mm, profile 3 top, HW 02	72565-6-40003-1
Profile knife, TC	40 x 50 x 2 mm, profile 3 bottom, HW 02	72565-6-40003-2
Profile knife, TC	40 x 30 x 2 mm, special profile, profiled, top, HW 02	72565-6-40301-1
Profile knife, TC	40 x 50 x 2 mm, special profile, profiled, bottom, HW 02	72565-6-40501-2
Blank, TC	40 x 30 x 2 mm, unprofiled, top, HW 02	72530-6-40300-R
Blank, TC	40 x 50 x 2 mm, unprofiled, bottom, HW 02	72530-6-40500-R
Torx clamping screw	M 4 x 5,9, extra-large head, T15	39076-0-04000-R
Torx key	T15, with handle	39077-0-04015-2

Area available for profiling (1:1)

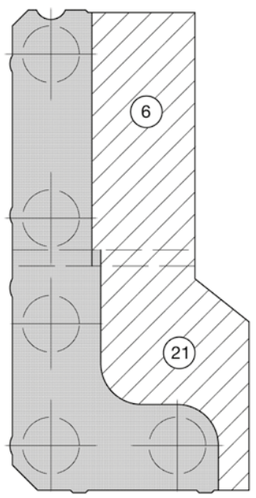

Standard profiles:

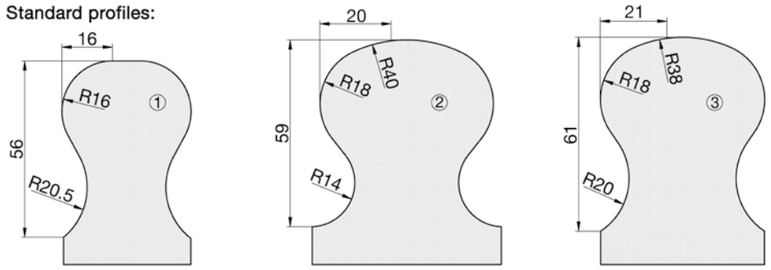

R. Milling Cutter & C. Cutters

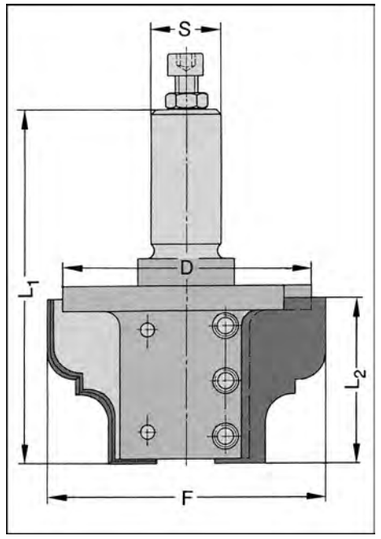

22480 tool body without knives and support plates

F mm	D mm	L_2 mm	L_1 mm	Shank mm	Part-No.
90	80	40	109	25 x 55 m. E. M 8	22480-0-90406-R
100	90	60	129	25 x 55 m. E. M 8	22480-0-10606-R

Technical details
Tool body for two profiled interchangeable TC knives with support plates. Also designed for bottom-cut. Right-hand rotation. For mechanical feed.
Please order the interchangeable TC knives and support plates **in addition.**

Application
For cutting decorative profiles in furniture and door production, as well as for ceiling and wall panelling, etc. on stationary routers and CNC machines.

R.P.M. $_{max.}$ = 12 000 (L_2 = 40 mm)
R.P.M. $_{max.}$ = 9 000 (L_2 = 60 mm)

Quantity discounts, ordering same profile: 5 - 9 pcs. = 12%, up from 10 pcs. = 25%.
Template costs: see page 7.32

Spare parts / Accessories		Part-No.
Profile knife, TC	30 x 25 x 2 mm, special profile, profiled, HW 02*	72480-6-30021-R
Profile knife, TC	40 x 36 x 2 mm, special profile, profiled, HW 02*	72480-6-40361-R
Profile knife, TC	60 x 41 x 2 mm, special profile, profiled, HW 02*	72480-6-60411-R
Blank, TC	30 x 25 x 2 mm, unprofiled, HW 02* for F = 60 mm, profile depth max. = 11 mm	72530-6-30250-R
Blank, TC	40 x 36 x 2 mm, unprofiled, HW 02* for F = 90 mm, profile depth max. = 17 mm	72480-6-40360-R
Blank, TC	60 x 41 x 2 mm, unprofiled, bevel 30°, HW 02* for F = 100 mm, profile depth max. = 22 mm	72480-6-60410-R
Support plate 4,2 mm thick	for knife 30 x 25 x 2, unprofiled	72481-0-30250-R
Support plate 4,2 mm thick	for knife 30 x 25 x 2, profiled	72481-0-30251-R
Support plate 4,2 mm thick	for knife 40 x 36 x 2, unprofiled	72481-0-40360-R
Support plate 4,2 mm thick	for knife 40 x 36 x 2, profiled	72481-0-40361-R
Support plate 4,2 mm thick	for knife 60 x 41 x 2, unprofiled, bevel 30°	72482-0-60410-R
Support plate 4,2 mm thick	for knife 60 x 41 x 2, profiled, bevel 30°	72482-0-60411-R
Clamping wedge	30 mm, Right-hand rotation	39280-0-03000-R
Clamping wedge	40 mm, Right-hand rotation	39280-0-04000-R
Clamping wedge	40 mm, Left-hand rotation	39280-0-04000-L
Clamping wedge	60 mm, Right-hand rotation	39280-0-06000-R
Allen screw	M 6 x 8 ISO 4028, for F = 60 mm	39266-0-06008-R
Ball pressing screw	M 8 x 12, for F = 90/100 mm	39072-0-08012-R
Key with T-handle	SW 4	39140-0-00401-0

* **HW 01** (for MDF) and **HW 04** (for solid wood) see page 7.14.

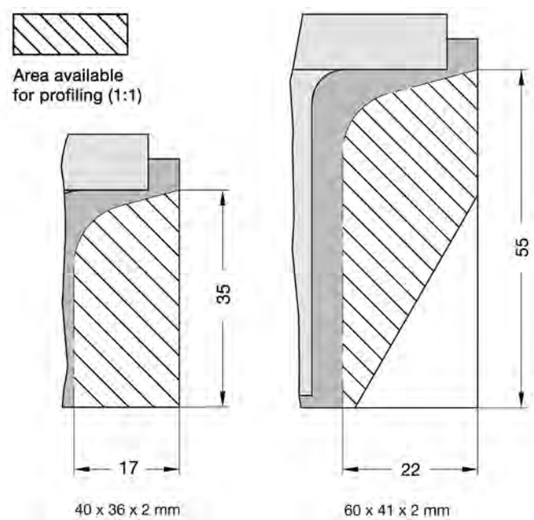

Multi-Profile Cutterheads for TC knives Z2

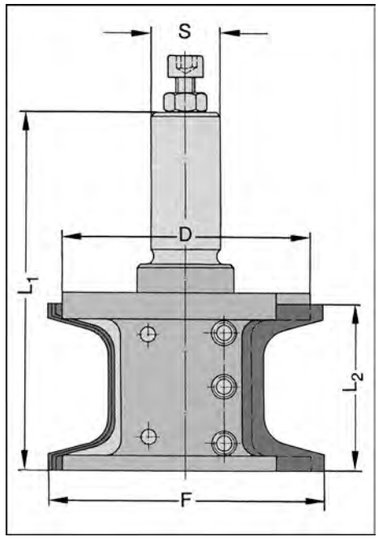

22485 tool body without knives and support plates

F mm	D mm	L_2 mm	L_1 mm	Shank mm	Part-No.
90	80	40	109	25 x 55 m. E. M 8	22485-0-90406-R
100	90	60	129	25 x 55 m. E. M 8	22485-0-10606-R

Technical details
Tool body for two profiled interchangeable TC knives with support plates. Right-hand rotation. Mechanical feed.
Please order the interchangeable TC knives and support plates **in addition.**

Application
For cutting decorative profiles in furniture and door production, as well as for ceiling and wall panelling, etc. on stationary routers and CNC machines.

R.P.M. $_{max.}$ = 12 000 (L_2 = 40 mm)
R.P.M. $_{max.}$ = 9 000 (L_2 = 60 mm)

Quantity discounts, ordering same profile: 5 - 9 pcs. = 12%, up from 10 pcs. = 25%.
Template costs: see page 7.32

Spare parts / Accessories		Part-No.
Profile knife, TC	40 x 36 x 2 mm, special profile, profiled, HW 02*	72485-6-40361-R
Profile knife, TC	60 x 41 x 2 mm, special profile, profiled, HW 02*	72485-6-60411-R
Blank, TC	40 x 36 x 2 mm, unprofiled, HW 02* for F = 90 mm, profile depth max. = 17 mm	72480-6-40360-R
Blank, TC	60 x 41 x 2 mm, unprofiled, HW 02* for F = 100 mm, profile depth max. = 22 mm	72485-6-60410-R
Support plate 4,2 mm thick	for knife 40 x 36 x 2, unprofiled	72481-0-40360-R
Support plate 4,2 mm thick	for knife 40 x 36 x 2, profiled	72481-0-40361-R
Support plate 4,2 mm thick	for knife 60 x 41 x 2, unprofiled	72481-0-60410-R
Support plate 4,2 mm thick	for knife 60 x 41 x 2, profiled	72481-0-60411-R
Clamping wedge	40 mm, Right-hand rotation	39280-0-04000-R
Clamping wedge	40 mm, Left-hand rotation	39280-0-04000-L
Clamping wedge	60 mm, Right-hand rotation	39280-0-06000-R
Clamping wedge	60 mm, Left-hand rotation	39280-0-06000-L
Ball pressing screw	M 8 x 12	39072-0-08012-R
Key with T-handle	SW 4	39140-0-00401-0

* **HW 01** (for MDF) and **HW 04** (for solid wood) see page 7.14.

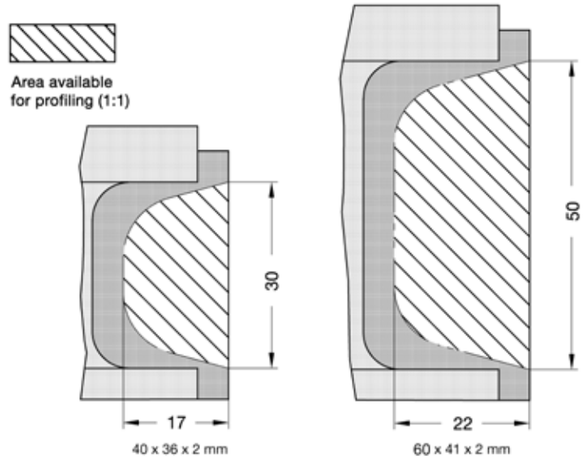

Angled Multi-Profiler for TC knives Z2

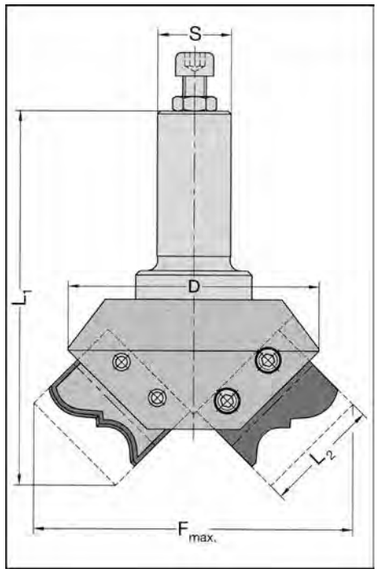

22460 tool body without knives and support plates

F_{max} mm	D mm	L_2 mm	L_1 mm	Shank mm	Part-No.
110	86,5	40	123	25 x 55 m. E. M 8	22460-0-00006-R
148	119	60	142	25 x 55 m. E. M 8	22460-0-00606-L
148	119	60	142	25 x 55 m. E. M 8	22460-0-00606-R

Technical details

Tool body for two profiled interchangeable TC knives with support plates, D = 119 mm made of high-quality light metal.
The unprofiled TC knives can be also used for the multi-profile cutterheads Nos. 22480/485 (pages 4.54/4.55).
For mechanical feed.
Please order the interchangeable TC knives and support plates **in addition.**

Application

Especially for large, deep, decorative profiles in furniture and door production, as well as ceiling or wall panelling on stationary routers and CNC machines.

R.P.M. $_{max.}$ = 12 000 (F_{max}= 110 mm)
R.P.M. $_{max.}$ = 8 000 (F_{max}= 148 mm)

Quantity discounts, ordering same profile: 5 - 9 pcs. = 12 %, up from 10 pcs = 25 %.
Template costs: see page 7.32

Spare parts / Accessories		Part-No.
Profile knife, TC	40 x 36 x 2 mm, special profile, profiled, HW 02*	72460-6-40361-R
Profile knife, TC	60 x 41 x 2 mm, special profile, profiled, HW 02*	72460-6-60411-R
Blank, TC	40 x 36 x 2 mm, unprofiled, HW 02* for F = 110 mm	72480-6-40360-R
Blank, TC	60 x 41 x 2 mm, unprofiled, HW 02* for F = 148 mm	72485-6-60410-R
Support plate 4,2 mm thick	for knife 40 x 36 x 2, unprofiled	72481-0-40360-R
Support plate 4,2 mm thick	for knife 40 x 36 x 2, profiled	72461-0-40361-R
Support plate 4,2 mm thick	for knife 60 x 41 x 2, unprofiled	72481-0-60410-R
Support plate 4,2 mm thick	for knife 60 x 41 x 2, profiled	72461-0-60411-R
Clamping wedge	40 mm, Right-hand rotation	39280-0-04000-R
Clamping wedge	60 mm, Right-hand rotation	39280-0-06000-R
Clamping wedge	60 mm, Left-hand rotation	39280-0-06000-L
Ball pressing screw	M 8 x 12	39072-0-08012-R
Key with T-handle	SW 4	39140-0-00401-0

* **HW 01** (for MDF) and **HW 04** (for solid wood) see page 7.14.

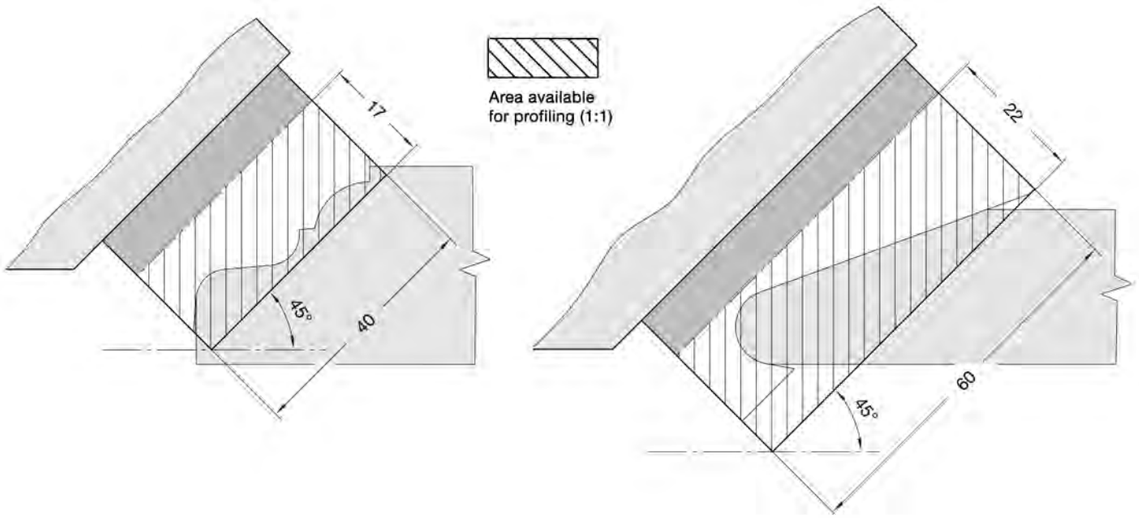

Bottom Cutting Multi-Profiler for TC knives Z2

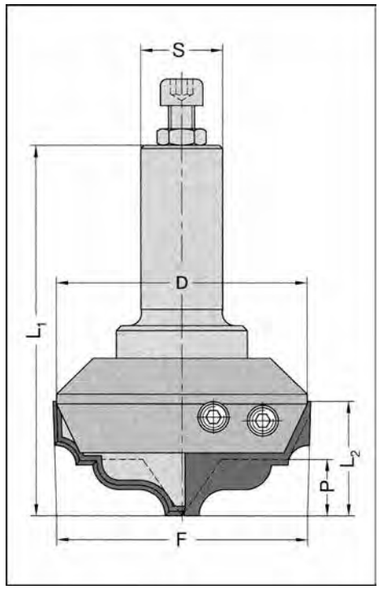

22470 tool body without knives and support plates

F_{max} mm	D mm	P mm	L_2 mm	L_1 mm	Shank mm	Part-No.
60	62	15	34	105	20 x 55 m. E. M 8	22470-0-60005-R
76	76	17	35	112	25 x 55 m. E. M 8	22470-0-00006-R

Technical details

Tool body for two profiled interchangeable TC knives with support plates. Right-hand rotation. For mechanical feed.
A equipment is consisting of one interchangeable TC knife each, **Type A and B,** as well as with two support plates, on F_{max} 60 mm tool with two knives and support plates of the same type.

Application

For cutting wide profile grooves, rosettes, flat, deep profiles, e.g. raised panels on CNC machines.
Also applicable for rebating and surfacing operations.

R.P.M. $_{max.}$ = 18 000 (F_{max} = 60 mm)
R.P.M. $_{max.}$ = 12 000 (F_{max} = 76 mm)

Quantity discounts, ordering same profile: 5 - 9 pcs. = 12%, up from 10 pcs. = 25%.
Template costs: see page 7.32

Spare parts / Accessories		Part-No.
Profile knife, TC	30 x 35 x 2 mm, special profile, profiled, HW 02*	72470-6-30021-R
Profile knife, TC	40 x 36 x 2 mm, special profile, profiled, HW 02* for F = 76 mm, type A	72470-6-40361-A
Profile knife, TC	40 x 36 x 2 mm, special profile, profiled, HW 02* for F = 76 mm, type B	72470-6-40361-B
Blank, TC	30 x 35 x 2 mm, unprofiled, HW 02* for F = 60 mm	72530-6-30350-R
Blank, TC	40 x 36 x 2 mm, unprofiled, HW 02* for F = 76 mm, type A	72470-6-40360-A
Blank, TC	40 x 36 x 2 mm, unprofiled, HW 02* for F = 76 mm, type B	72470-6-40360-B
Support plate 4,2 mm thick	for knife 30 x 35 x 2 mm, unprofiled	72471-0-30350-R
Support plate 4,2 mm thick	for knife 30 x 35 x 2 mm, profiled	72471-0-30351-R
Support plate 4,2 mm thick	for knife 40 x 36 x 2 mm, unprofiled	72481-0-40360-R
Support plate 4,2 mm thick	for knife 40 x 36 x 2 mm, profiled	72471-0-40361-R
Clamping wedge	28 mm, Right-hand rotation	39270-0-02800-R
Clamping wedge	28 mm, Left-hand rotation	39270-0-02800-L
Clamping wedge	35 mm, Right-hand rotation	39270-0-03500-R
Clamping wedge	35 mm, Left-hand rotation	39270-0-03500-L
Ball pressing screw	M 8 x 12 (for F = 76 mm)	39072-0-08012-R
Ball pressing screw	M 6 x 10 (for F = 60 mm)	39072-0-06010-R
Key with T-handle	SW 4	39140-0-00401-0

* **HW 01** (for MDF) and **HW 04** (for solid wood) see page 7.14.

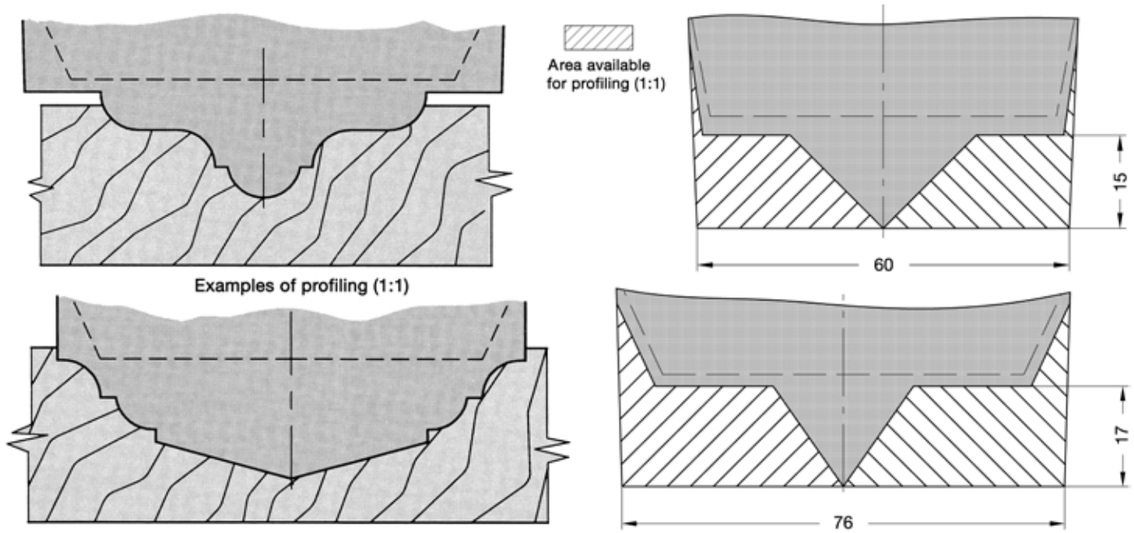

R. Milling Cutter & C. Cutters

Circular Saw Blades TCT

for CNC machines

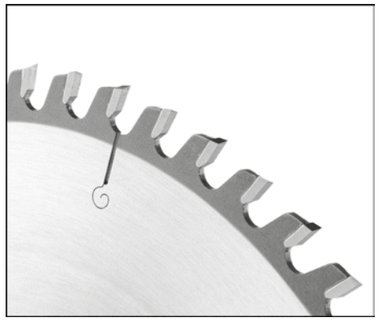

81000 / 85000

D x B mm	Z	$a_{e\,max}$ mm	NL pcs./ø/pcd	Machine	Part-No.
Without pin holes, with chip limitors, with 2 uni pin holes, d= 30 mm					
250 x 3,2/2,2	24 W	36			81010-5-25024-0
350 x 3,5/2,5	32 W	100			81010-5-35032-0
Without pin holes, d= 30 mm					
250 x 3,2/2,2	48 W	40			81030-5-25048-0
250 x 3,2/2,2	60 W	49			81031-5-25060-0
250 x 3,2/2,2	80 TR/F	49			85030-5-25080-0
300 x 3,2/2,2	60 W	85			81030-5-30060-0
350 x 3,5/2,5	84 W	100			81030-5-35084-0
For arbor No. 21079 (JSO), d= 30 mm					
150 x 3,2/2,2	36 W	49	4/6/48 w.c.		81030-5-15036-2
180 x 3,2/2,2	42 W	51	4/6/48 w.c.		81030-5-18042-2
200 x 3,2/2,2	48 W	49	4/6/48 w.c.		81030-5-20048-2
200 x 3,2/2,2	64 W	36	4/6/48 w.c.		81030-5-20064-2
For saw blade flange No. 39495 (JSO), d= 60 mm					
200 x 3,2/2,2	48 W	49	6/6/80 w.c.		81030-5-20048-3
200 x 3,2/2,2	64 W	36	6/6/80 w.c.		81030-5-20064-3
250 x 3,2/2,2	60 W	49	6/6/80 w.c.		81030-5-25060-3
300 x 3,2/2,2	72 W	49	6/6/80 w.c.		81060-5-30072-3
For saw blade flange No. 39498-0 (JSO), d= 30 mm					
250 x 3,2/2,2	48 W	49	4/5,5/52 w.c.		81030-5-25048-7
250 x 3,2/2,2	60 W	49	4/5,5/52 w.c.		81031-5-25060-7
250 x 3,2/2,2	80 TR/F	49	4/5,5/52 w.c.		85030-5-25080-7
300 x 3,2/2,2	60 W	85	4/5,5/52 w.c.		81030-5-30060-7
For saw blade flange No.39498 (Homag), d= 30 mm					
250 x 3,2/2,2	48 W	49	8/5,5/90 w.c.		81030-5-25048-9
250 x 3,2/2,2	60 W	49	8/5,5/90 w.c.		81031-5-25060-9
250 x 3,2/2,2	80 TR/F	49	8/5,5/90 w.c.		85030-5-25080-9
300 x 3,2/2,2	60 W	85	8/5,5/90 w.c.		81030-5-30060-9
350 x 3,5/2,5	84 W	100	8/5,5/90 w.c.		81030-5-35084-9
For saw blade aggregates on CNC machines, d= 30 mm					
250 x 3,2/2,2	48 W	49	2/7/42 + 2/10/60	Homag	81030-5-25048-4
250 x 3,2/2,2	60 W	49	2/7/42 + 2/10/60	Homag	81031-5-25060-4
250 x 3,2/2,2	80 TR/F	49	2/7/42 + 2/10/60	Homag	85030-5-25080-4
300 x 3,2/2,2	60 W	85	2/7/42 + 2/10/60	Homag	81030-5-30060-4

F = square teeth W = alternate top bevel teeth TR/F = trapezoidal - square teeth w. c. = with countersink
a_e = cutting depth

Technical details
Alternate top bevel teeth (W) or trapeziodal-square teeth (TR/F) with different ranges of teeth. TCT, with positive hook. Drive holes with or without countersunk depending on application.

Note:
The nomenclature for custom-specific drilling of drive holes see our home page under "saw blades".

Technical details
Mounted on arbor No. 21079, saw blade flange No. 39495 / 39498 or directly on saw aggregates to be used on CNC working centres.
Design "with chip limitors" for ripping and cross cutting of soft and hard woods, plywood and other block board materials.
The right selection of the number of teeth and the teeth shape depends on workpiece material, material thickness, feed rate and cutting quality.

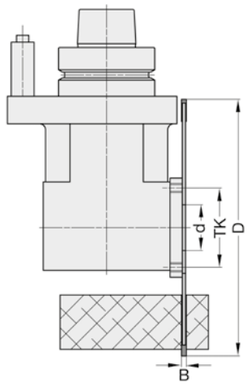

Arbor No. 21079

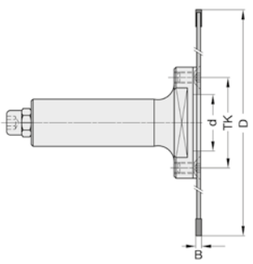

Clamping flange No. 39498

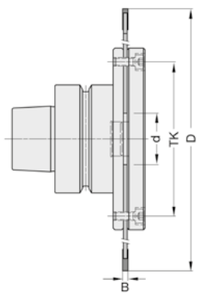

Clamping flange No. 39495

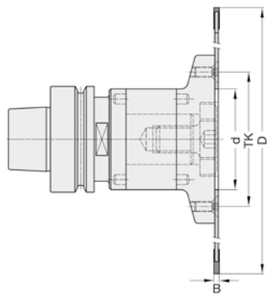

Grooving Saw Blades TCT Z6 / Z12

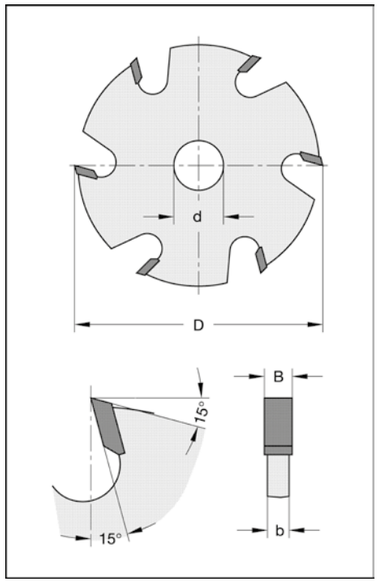

40150 / 40160

D mm	B mm	b mm	d mm	Z	Part-No.
100	2,0	1,4	20	6	40150-5-10020-0
100	3,0	2,0	20	6	40150-5-10030-0
100	4,0	3,0	20	6	40150-5-10040-0
100	5,0	3,5	20	6	40150-5-10050-0
125	2,5	1,4	30	12	40160-5-12525-0
125	3,0	2,0	30	12	40160-5-12530-0
125	4,0	3,0	30	12	40160-5-12540-0
125	5,0	4,0	30	12	40160-5-12550-0
125	6,0	4,0	30	12	40160-5-12560-0
125	8,0	6,0	30	12	40160-5-12580-0
125	10,0	8,0	30	12	40160-5-12510-0

PCD-grooving saw blades see type 40180-9 page 5.29

Technical details
Tool body as saw blade design, square teeth.
D = 100 mm Z = 6, for manual and mechanical feed.
D = 125 mm Z = 12, for mechanical feed

Application
For grooving in solid wood or in panel materials in conjunction with arbors on pages 6.6, 6.8 and 6.12, 6.13.
For use on CNC machines.

R.P.M. $_{max.}$ = 12 000 (D = 100 mm)
R.P.M. $_{max.}$ = 10 000 (D = 125 mm)

Extra costs for:
enlarging bore diameter, No. 39710-0-01000-0
- adaption of keyway, No. 39720-0-01000-0
- drilling countersunk holes for arbor No. 21079 (on page 6.12), No. 39745-0-00004-0 see pages 7.31 - 7.32

Router Cutter TCT Z1

for eccentric use

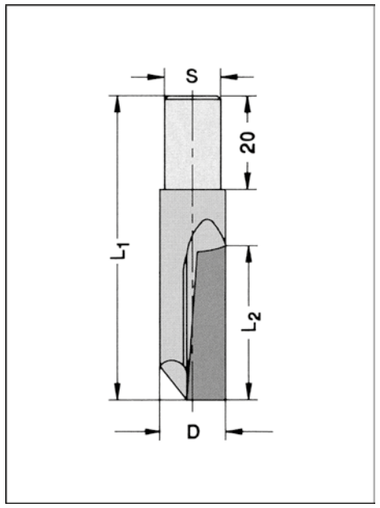

20046

D mm	L_2 mm	L_1 mm	Shank mm	Part-No.
10	27	60	9,5	20046-5-10000-R

Technical details
One straight edge, cutting on bottom and periphery. Without back relief. TC-tipped design. Right-hand rotation.
For mechanical and manual feed.

Application
For general routing operations, e.g. grooving, jointing, etc. in soft and hardwood. For use with **eccentric clamping chucks** on stationary routers.

R. Milling Cutter & C. Cutters

Aperture Cutter TCT Z2

with TCT plunge tip

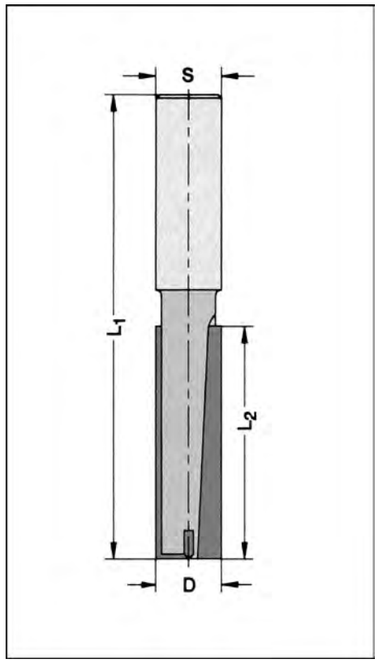

20240

D mm	L_2 mm	L_1 mm	Shank mm	Part-No.
14	50	100	12 x 40	20240-5-12040-R
14	50	100	14 x 40	20240-5-14040-R

Technical details
Two straight TCT edges, cutting on bottom and periphery, with TCT centre tip for plunge cutting. Right-hand rotation. For mechanical and manual feed.

Application
For general routing operations, e.g. grooving, jointing, trimming and apertures, etc. in hardwood, compressed wood, various kinds of wood composites and boards, in concentric clamping chucks on stationary and portable routers.

Diamond Milling Cutters

Precision creates value

Selection Guide PCD Router Cutters

Part-No.	Article	Number of teeth Z	Plunge cutting tip	Softwood	Hardwood	Multiplex, Plywood	MDF, Chipboard raw	OSB	Chipboard, veneered	Chipboard, laminated	Chipboard, paper coated	MDF, veneered	MDF, laminated	MDF, paper coated	Composite materials, HPL, Trespa	Thermoplastics	Fibre-reinforced GFK, CFK	Mineral plastics Corian, Varicor	Gipsum plaster boards	Cement boundes wood fibre board, gypsum fibre board
Feed range				B	A	A	C	B	B	C	B	B	C	B	A	A	A	A	B	A
12100	Diastart-UNO	1+1	PCD				X	X		X			X						X	X
12200	Diastart-DUO	2	PCD			X	X	X		X			X						X	X
12500	Dianova	1	PCD				X	X	O	O		O	O							
12550	Dianova-UNO	1	TC				X								X					
12660	Dianova-DUO	2	PCD					X	O	X	O	O	X	O						
13510	Dianorm	1	PCD				X	X	O	X		O	X							
13700	Dianorm-DUO	2	PCD					X	X	X	O	X	X	O						
13701	Dianorm-DUO	2	PCD		O	O	O	X				O	O	O						X
13750	Dianorm-TRIO	3	PCD			X			X	X	X	X	X	X	O					
14250	Diatec-DUO	2	PCD			X	X								X	X	X	X		X
14253	Diatec-TRIO	3	PCD	O	X	X	X	X	O	X	O	O	X	O	X	O	X	X	X	X
14256	Diatec-TRIO-Roughing cutter	3	PCD	O	X	X	X	X		X			X		X	O	X	X	X	X
14300	Diatec	2	TC				X		O	X	O	O	X	O						
14310	Diatec-Pro-DUO	2+2	PCD	O	X	X	O	O	X	X	X	X	X	X						
14330	Diatec-Pro-TRIO	3+3	PCD	O	X	X	O	O	X	X	X	X	X	X						
15530	Diatec-WOOD	2+2	PCD	X	X	O														
15540	Diamatic-DUO	2	PCD			X	O													
15551	Diamatic	3	PCD				O	X	X	X	X	X	X	X						
15552	Diamatic-Plus	3	PCD		X	X	O	X	X	X		X	X							
15553	Diamatic	3	PCD				O	X	X	X	X	X	X	X						
15555	Diamatic-TRIO	3	PCD				O	X	X	X	X	X	X	X						
15556	Diamatic-Quattro	4	PCD				O	X	X	X	X	X	X	X						
15600	Megaspeed	4+2+4	PCD				O	X		X			X						X	
15700	Gigaspeed-UNO	1	PCD	X	X	X	O	O	X	X	X	X	X	X						
15700	Gigaspeed-DUO	2	PCD	X	X	X	O	O	X	X	X	X	X	X						
15700	Gigaspeed-TRIO	3	PCD	X	X	X	O	X	X		X	X		X	O			O		
15750	Gigaspeed-Particle	3	-				X	X	X	X	X	X	X	X						
17600	4Cut Decorative groove	1	-			X	X								X			O		
17030	4Cut Router cutter	2	-				X		X	X		X	X							
17525 Ø 82mm	4Cut Surfacing cutter	3	-		O	X	X								X	X		X		
17525 Ø150mm	4Cut Surfacing cutter	6	-				X													

X Recommendations
X Well suitable
O Suitable with certain restrictions

Feed ranges for R.P.M. = 24 000

Feed range vf [m/min]			
Number of teeth	**A**	**B**	**C**
1	3 - 4	5 - 7	7 - 10
2	6 - 9	10 - 14	13 - 20
3	9 - 13	14 - 22	20 - 30
4	12 - 17	19 - 29	17 - 40

Diastart-UNO

Z1+1

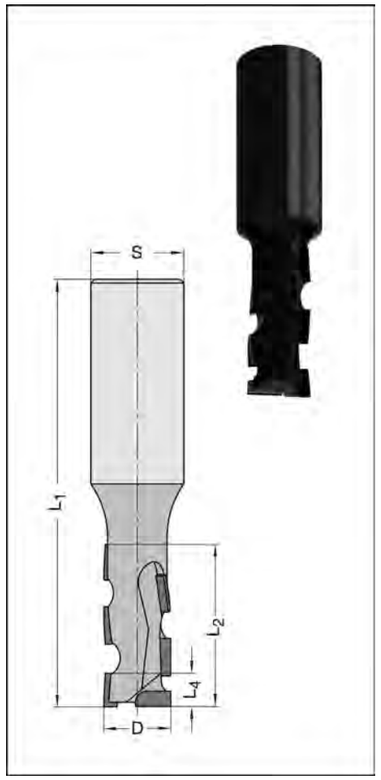

12100

D mm	L_2 mm	L_4 mm	L_1 mm	T.H. mm	Shank mm	Part-No.
10	26	9,2	75	2,5	12 x 40	12100-9-10262-L
10	26	9,2	75	2,5	12 x 40	12100-9-10262-R
12	26	9,2	75	2,5	12 x 40	12100-9-12262-L
12	26	9,2	75	2,5	12 x 40	12100-9-12262-R
12	26	9,2	80	2,5	16 x 45	12100-9-12263-L
12	26	9,2	80	2,5	16 x 45	12100-9-12263-R
12	35	9,2	85	2,5	12 x 40	12100-9-12352-L
12	35	9,2	85	2,5	12 x 40	12100-9-12352-R
12,7	26	9,2	75	2,5	12,7 x 40	12100-9-12726-L
12,7	26	9,2	75	2,5	12,7 x 40	12100-9-12726-R
15,88	35	9,2	90	2,5	15,88 x 45	12100-9-15835-L
15,88	35	9,2	90	2,5	15,88 x 45	12100-9-15835-R
16	26	9,2	80	2,5	16 x 45	12100-9-16263-L
16	26	9,2	80	2,5	16 x 45	12100-9-16263-R
16	35	9,2	90	2,5	16 x 45	12100-9-16353-L
16	35	9,2	90	2,5	16 x 45	12100-9-16353-R
16	35	9,2	105	2,5	25 x 60	12100-9-16356-L
16	35	9,2	105	2,5	25 x 60	12100-9-16356-R
18	26	9,2	90	2,5	20 x 55	12100-9-18265-L
18	26	9,2	90	2,5	20 x 55	12100-9-18265-R
18	35	9,2	100	2,5	20 x 55	12100-9-18355-L
18	35	9,2	100	2,5	20 x 55	12100-9-18355-R
18	43	9,2	115	2,5	25 x 60	12100-9-18436-L
18	43	9,2	115	2,5	25 x 60	12100-9-18436-R
19,05	43	9,2	115	2,5	25,4 x 60	12100-9-19054-L
19,05	43	9,2	115	2,5	25,4 x 60	12100-9-19054-R
20	26	9,2	95	2,5	25 x 60	12100-9-20266-L
20	26	9,2	95	2,5	25 x 60	12100-9-20266-R
20	52	9,2	120	2,5	25 x 60	12100-9-20526-L
20	52	9,2	120	2,5	25 x 60	12100-9-20526-R
25	26	9,2	95	2,5	25 x 60	12100-9-25266-L
25	26	9,2	95	2,5	25 x 60	12100-9-25266-R
25	52	9,2	120	2,5	25 x 60	12100-9-25526-L
25	52	9,2	120	2,5	25 x 60	12100-9-25526-R

Technical details
* tool body made of steel
* burnished
* periphery tips and plunge tip made from pcd
* alternative shear cut
* several times regrindable
* without length adjusting screw

Application
* grooving, sizing, severing and rebating of classically wood composites
* suitable for axial and ramp plunge cutting

Special advantages
* cost effective
* PCD-plunge tip also cutting on periphery (Z2)
* Dianova tip seat design

Application data
R.P.M. = 18 000 - 24 000
v_f = 3 - 7 m/min

Diastart-DUO

Z2

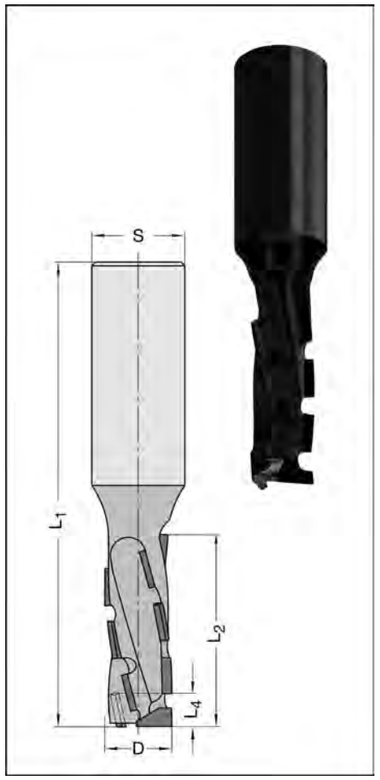

12200

D mm	L_2 mm	L_4 mm	L_1 mm	T.H. mm	Shank mm	Part-No.
15,88	37	9,2	90	2,5	15,88 x 45	12200-9-15837-L
15,88	37	9,2	90	2,5	15,88 x 45	12200-9-15837-R
16	28	9,2	100	2,5	20 x 55	12200-9-16285-L
16	28	9,2	100	2,5	20 x 55	12200-9-16285-R
16	37	9,2	90	2,5	16 x 45	12200-9-16373-L
16	37	9,2	90	2,5	16 x 45	12200-9-16373-R
18	28	9,2	95	2,5	25 x 60	12200-9-18286-L
18	28	9,2	95	2,5	25 x 60	12200-9-18286-R
18	47	9,2	115	2,5	25 x 60	12200-9-18476-L
18	47	9,2	115	2,5	25 x 60	12200-9-18476-R
19,05	47	9,2	115	2,5	25,4 x 60	12200-9-19057-L
19,05	47	9,2	115	2,5	25,4 x 60	12200-9-19057-R
20	28	9,2	95	2,5	25 x 60	12200-9-20286-L
20	28	9,2	95	2,5	25 x 60	12200-9-20286-R
20	47	9,2	120	2,5	25 x 60	12200-9-20476-L
20	47	9,2	120	2,5	25 x 60	12200-9-20476-R
25	28	9,2	95	2,5	25 x 60	12200-9-25286-L
25	28	9,2	95	2,5	25 x 60	12200-9-25286-R
25	47	9,2	120	2,5	25 x 60	12200-9-25476-L
25	47	9,2	120	2,5	25 x 60	12200-9-25476-R

Technical details
* tool body made of steel
* burnished
* periphery tips and plunge tip made from pcd
* alternative shear cut
* several times regrindable
* without length adjusting screw

Application
* grooving, sizing, severing and rebating of classically wood composites
* suitable for axial and ramp plunge cutting

Special advantages
* cost effective
* Dianova tip seat design

Application data
R.P.M. = 18 000 - 24 000
v_f = 6 - 10 m/min

Diamond Milling Cutters

Dianova

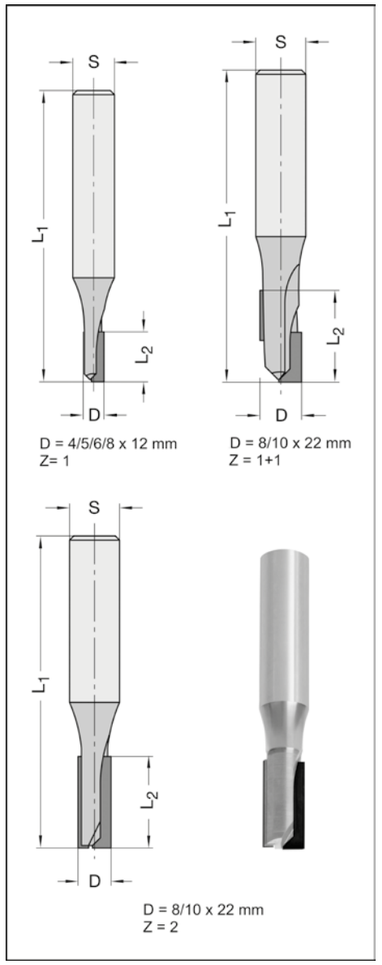

12500

D mm	L_2 mm	L_1 mm	Z	T.H. mm	Shank mm	Part-No.
4	12	55	1	1,5	6 x 35	12500-8-04120-R
5	12	70	1	2,0	10 x 45	12500-8-05120-R
5	12	60	1	2,0	6 x 40	12500-8-05121-R
6	12	70	1	2,5	12 x 45	12500-8-06122-R
6	15	60	1	2,5	8 x 40	12500-8-06150-R
8	12	70	1	2,5	12 x 45	12500-8-08122-R
8	15	55	2	2,5	8 x 35	12500-8-08150-R
8	22	70	1 + 1	2,5	8 x 40	12500-8-08221-R
8	22	75	2	2,5	12 x 40	12500-8-08222-R
8	22	75	1	2,5	12 x 40	12500-8-08223-R
10	15	65	2	2,5	10 x 40	12500-8-10151-R
10	22	75	2	2,5	12 x 40	12500-8-10002-R
10	22	75	1	2,5	12 x 40	12500-8-10022-R
10	22	75	1+1	2,5	12 x 40	12500-8-10222-R

D = 12 mm see no. 12550 Z1 (page 5.5)

Technical details
* tool body made of solid TC
* periphery tips and plunge tip made of pcd
* one or two straight periphery cutting edges, Z 1+1 design with alternate shear angle
* up to 3 times regrindable

Application
* grooving, jointing and severing of classically wood composites, diverse plastics and aluminium
* applicable for ramp plunge cutting

Special advantages
* continuous cutting edges for line-free cut (Z1 and Z2)

Application data
Z1: R.P.M. = 18 000 - 24 000, v_f = 1 - 2 m/min
Z2: R.P.M. = 18 000 - 24 000, v_f = 2 - 4 m/min

Dianova-UNO

Z1

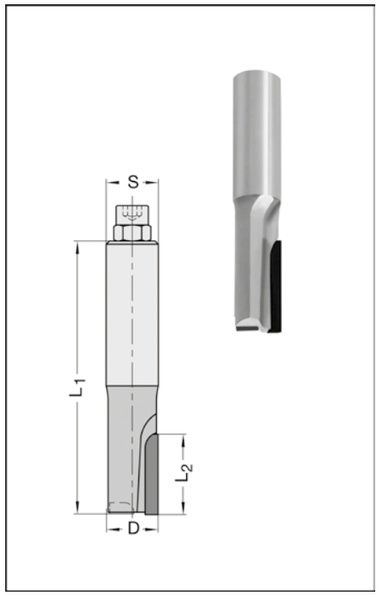

12550

D mm	L_2 mm	L_1 mm	T.H. mm	Shank mm	Part-No.
12*	25	70	3,0	12 x 35	12550-8-12252-R
16	35	95	3,0	16 x 45 m. E. M 6	12550-8-16353-R

Technical details
* tool body made of steel or high-density metal (*)
* steel body nickel coated
* TC plunge tip
* straight cutting edge
* several times regrindable

Application
* grooving, sizing, severing and rebating of wood composites and plastics (HPL, Trespa, Corian)
* applicable for axial- and ramp plunge cutting

Special advantages
* Dianova tip seat design
* line-free cut

Application data
Wood composites: R.P.M. = 18 000 - 24 000, v_f = 2 - 8 m/min
Plastic materials: R.P.M. = 18 000 - 24 000, v_f = 1 - 4 m/min

Dianova-PLUS

Z2

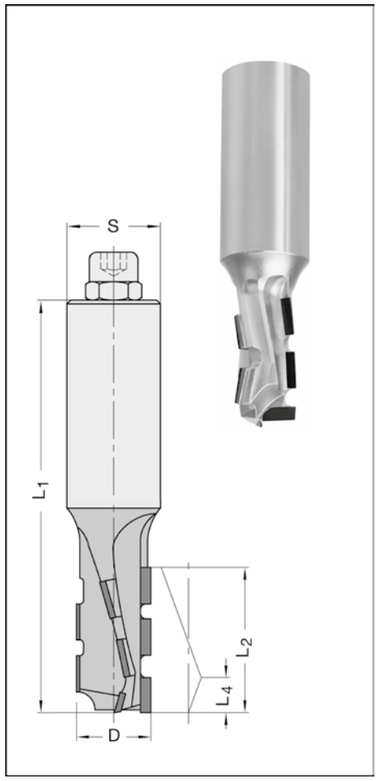

12660

D mm	L_2 mm	L_4 mm	L_1 mm	T.H. mm	Shank mm	Part-No.
16	33*	9,5	100	3,0	20 x 55 m. E. M 8	12660-8-16285-R
18	33*	9,5	100	3,0	25 x 55 m. E. M 8	12660-8-18286-R
18	43*	9,5	110	3,0	25 x 55 m. E. M 8	12660-8-18386-R
18	53*	9,5	120	3,0	25 x 55 m. E. M 8	12660-8-18486-L
18	53*	9,5	120	3,0	25 x 55 m. E. M 8	12660-8-18486-R

* The last 5 mm on shank side with single cutting edge (Z1).

Technical details
* tool body made of steel
* nickel coated
* periphery tips and plunge tip made from pcd
* alternative shear cut
* up to 6 times regrindeable

Application
* grooving, sizing, severing and rebating of classically wood composites
* applicable for axial- and ramp plunge cutting

Application data
R.P.M. = 18 000 - 24 000
v_f = 8 - 20 m/min

Diamond Milling Cutters

Dianorm

Z1+1

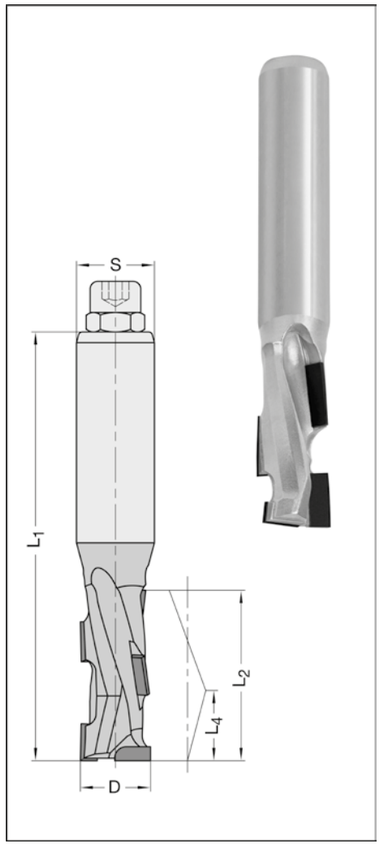

13510

D mm	L_2 mm	L_4 mm	L_1 mm	T.H. mm	Shank mm	Part-No.
12	26	9,4	80	4,0	12 x 45	13510-9-12262-L
12	26	9,4	80	4,0	12 x 45	13510-9-12262-R
16	26	9,4	90	4,0	16 x 50 m.E. M 6	13510-9-16263-R
16	35	9,4	100	4,0	16 x 50 m.E. M 6	13510-9-16353-L
16	35	9,4	100	4,0	16 x 50 m.E. M 6	13510-9-16353-R
16	35	9,4	105	4,0	25 x 55 m. E. M 8	13510-9-16356-R
18	35	9,4	100	4,0	16 x 50 m.E. M 6	13510-9-18353-R
18	35	9,4	105	4,0	25 x 55 m. E. M 8	13510-9-18356-L
18	35	9,4	105	4,0	25 x 55 m. E. M 8	13510-9-18356-R
18	43	9,4	110	4,0	20 x 55 m. E. M 8	13510-9-18435-L
18	43	9,4	110	4,0	20 x 55 m. E. M 8	13510-9-18435-R
18	43	9,4	110	4,0	25 x 55 m. E. M 8	13510-9-18436-L
18	43	9,4	110	4,0	25 x 55 m. E. M 8	13510-9-18436-R
20	35	9,4	105	4,0	25 x 55 m. E. M 8	13510-9-20356-R
20	52	9,4	120	4,0	20 x 55 m. E. M 8	13510-9-20525-L
20	52	9,4	120	4,0	20 x 55 m. E. M 8	13510-9-20525-R
20	52	9,4	120	4,0	25 x 55 m. E. M 8	13510-9-20526-L
20	52	9,4	120	4,0	25 x 55 m. E. M 8	13510-9-20526-R

Technical details
* tool body made of steel
* nickel coated
* periphery tips and plunge tip made from pcd
* alternative shear cut
* up to 10 times regrindable

Application
* grooving, sizing, severing and rebating of classically wood composites
* applicable for axial- and ramp plunge cutting

Special advantages
* Dianova tip seat design

Application data
R.P.M. = 18 000 - 24 000
v_f = 3 - 7 m/min

Dianorm-DUO

Z2

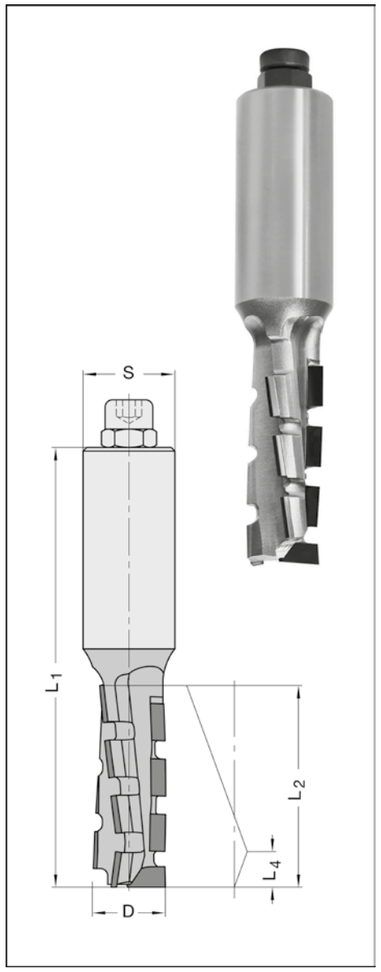

13700 for chipboard and MDF

D mm	L_2 mm	L_4 mm	L_1 mm	T.H. mm	Shank mm	Part-No.
20	52*	9,5	120	4,0	25 x 55 m. E. M 8	13700-9-20486-L
20	52*	9,5	120	4,0	25 x 55 m. E. M 8	13700-9-20486-R

*The last 4 mm resp. 5 mm on shank side with single cutting edge (Z1).

Technical details
* tool body made of steel
* nickel coated
* periphery tips and plunge tip made from pcd
* real Z2-tipping on 3 flutes without overlap areas
* alternative shear cut
* up to 7 times regrindable

Application
* grooving, sizing, severing and rebating on classically wood composites
* applicable for axial- and ramp plunge cutting

Special advantages
* gap less, real Z2-tipping
* cutting edge geometry especially applicable for chip- and MDF-board

Application data
R.P.M. = 18 000 - 24 000
v_f = 5 - 12 m/min

13701 for hardwood and composite materials

D mm	L_2 mm	L_4 mm	L_1 mm	T.H. mm	Shank mm	Part-No.
20	40*	10	105	4,0	25 x 55 m. E. M 8	13701-9-20356-L
20	40*	10	105	4,0	25 x 55 m. E. M 8	13701-9-20356-R
20	55*	10	120	4,0	25 x 55 m. E. M 8	13701-9-20486-L
20	55*	10	120	4,0	25 x 55 m. E. M 8	13701-9-20486-R

*The last 4 mm resp. 5 mm on shank side with single cutting edge (Z1).

Technical details
* tool body made of steel
* nickel coated
* periphery tips and plunge tip made from pcd
* real Z2-tipping on 3 flutes without overlap areas
* alternative shear cut
* up to 7 times regrindable

Application
* grooving, sizing, severing and rebating of classiclally wood componates, laminates (HPL) and solid wood
* applicable for axial- and ramp plunge cuttinng

Special advantages
* gap less, real Z2-tipping
* cutting edge geometry especially applicable for hardwood, laminates and Multiplex

Application data
R.P.M. = 18 000 - 24 000
v_f = 3 - 10 m/min

Diamond Milling Cutters

Dianorm-TRIO

Z3

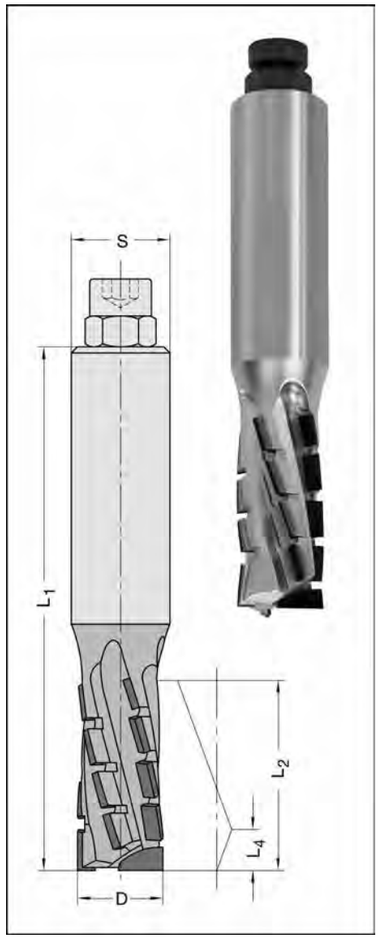

13750

D mm	L_2 mm	L_4 mm	L_1 mm	T.H. mm	Shank mm	Part-No.
12	24	7	75	3,0	12 x 40	13750-9-12242-R
14	30	7	85	3,0	16 x 45 m. E. M 6	13750-9-14303-R
25*	70	8,5	140	4,5	25 x 60 m. E. M 8	13750-9-25706-R

Technical details
* tool body made of steel (*) or high-density metal
* nickel coated
* periphery tips and plunge tip made from pcd
* real Z3-tipping on 4 flutes without overlap areas
* alternative shear cut
* up to 4 times regrindable (Ø12 and Ø14)
* up to 7 times regrindable (Ø25)

Application
* grooving, sizing, severing and rebating on classically wood composites
* applicable for axial- and ramp plunge cutting

Special advantages
* cutting edge geometrie especially applicable for machining of chip- and MDF board
* on certain conditions useable for machining composite materials and solid wood
* Ø 12 and 14 mm especially applicable for nesting operation by uncommon or wavering board thicknesses
* up to 30% longer life time possible compared to Diamatic router cutters

Application data:
R.P.M. = 18 000 - 24 000
v_f = 18 - 35 m/min

Diatec-DUO

Z2

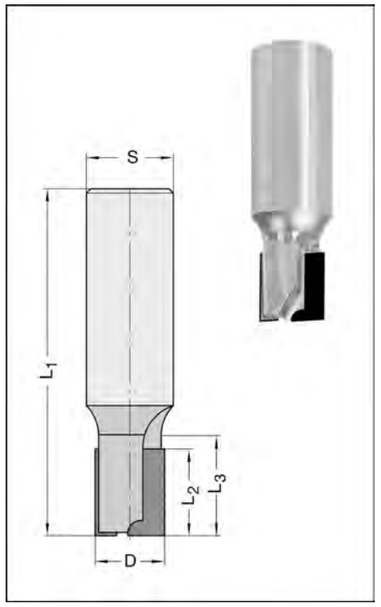

14250

D mm	L_2 mm	L_3 mm	L_1 mm	T.H. mm	Shank mm	Part-No.
5	10	12	50	1,5	6 x 35	14250-9-05100-R
6	15	20	65	2,0	6 x 40	14250-9-06150-R
8	15	20	65	2,5	8 x 40	14250-9-08150-R
8	20	25	70	2,5	8 x 40	14250-9-08200-R
10	10	15	75	2,5	10 x 50	14250-9-10100-R
10	15	20	75	2,5	10 x 45	14250-9-10150-R
10	20	25	80	2,5	10 x 50	14250-9-10200-R
12	15	20	70	3,0	12 x 45	14250-9-12152-R
12	20	25	75	3,5	12 x 45	14250-9-12202-R
12	25	30	75	3,5	12 x 45	14250-9-12252-R
12	30	35	80	3,0	12 x 40	14250-9-12302-R
16*	10	20	80	4,5	16 x 50 m. E. M 6	14250-9-16103-R
16*	15	25	80	4,5	16 x 50 m. E. M 6	14250-9-16153-R
16*	20	25	80	5,0	20 x 50 m. E. M 8	14250-9-16205-R
16	25	30	80	4,5	16 x 45	14250-9-16253-R
18*	15	25	80	5,0	18 x 50 m. E. M 8	14250-9-18155-R
18*	20	25	80	5,0	18 x 50 m. E. M 8	14250-9-18205-R
20*	20	30	85	5,0	20 x 50 m. E. M 8	14250-9-20205-R

Technical details
* tool body made of steel (*) or solid tungsten carbide
* periphpery tips and plunge tip made from pcd
* alternative shear cut
* several times regrindable

Application
* finishing, grooving, sizing, severing (nesting) and rebating of particularly abrasive workpiece materials
* applicable for axial- and ramp plunge cutting

Spezial advantages
* continous cutting edges for line-free cut

Application data
Heat-setting material/Thermoplastics / HPL: R.P.M. = 15 000 - 22 000, v_f = 1 - 5 m/min
Solid surface: R.P.M. = 15 000 - 22 000, v_f = 4 - 8 m/min
Wood based panels: R.P.M. = 18 000 - 24 000, v_f = 6 - 9 m/min

Diamond Milling Cutters

Diatec-TRIO Finishing cutters

Z3

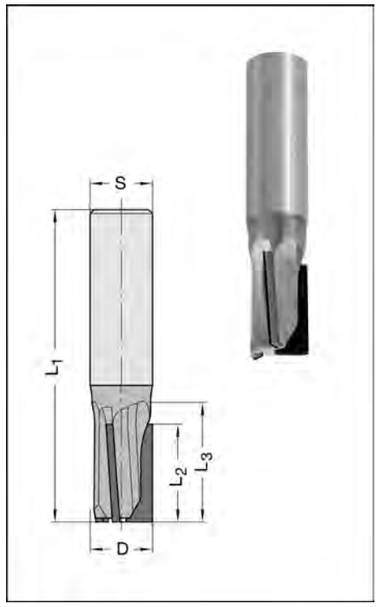

14253

D mm	L_2 mm	L_3 mm	L_1 mm	T.H. mm	Shank mm	Part-No.
10	25	35	70	3,0	10 x 35	14253-9-10250-R
12	10	19	70	3,0	12 x 40	14253-9-12102-R
12	15	24	70	3,0	12 x 40	14253-9-12152-R
12	20	29	75	3,0	12 x 40	14253-9-12202-R
12	25	34	80	3,0	12 x 40	14253-9-12252-R
14	15	23	70	4,0	14 x 40	14253-9-14151-R
14	20	28	75	4,0	14 x 40	14253-9-14201-R
14	25	33	80	4,0	14 x 40	14253-9-14251-R
16	10	25	80	4,5	16 x 50	14253-9-16103-R
16	15	30	80	4,5	16 x 45	14253-9-16153-R
16	20	30	80	4,5	16 x 45	14253-9-16203-R
16	25	30	80	4,5	16 x 45	14253-9-16253-R
16	30	35	85	4,5	16 x 45	14253-9-16303-R
16	35	40	90	4,5	16 x 45	14253-9-16353-R
20	10	15	85	4,5	20 x 60	14253-9-20105-R
20	15	20	85	4,5	20 x 60	14253-9-20155-R
20	20	25	85	4,5	20 x 55	14253-9-20205-R
20	25	30	90	4,5	20 x 55	14253-9-20255-R
20	30	35	95	4,5	20 x 55	14253-9-20305-R

Technial details
* tool body made of solid tungsten carbide
* periphery tips and plunge tip made from pcd
* alternative shear cut (2 negative; 1 positive)
* several times regrindable

Application
* finishing, grooving, sizing, severing (nesting) and rebating of particularly abrasive workpiece materials
* applicable for axial- and ramp plunge cutting

Special advantages
* continious cutting edges for line-free cut

Application data
* Heat-setting material/Thermoplastics / HPL: R.P.M. = 15 000 - 18 000, v_f = 3 - 8 m/min
* Solid surface: R.P.M. = 15 000 - 18 000, v_f = 6 - 10 m/min
* Wood based panels: R.P.M. = 18 000 - 24 000, v_f = 12 - 20 m/min

Diatec-TRIO Roughing cutters

Z3

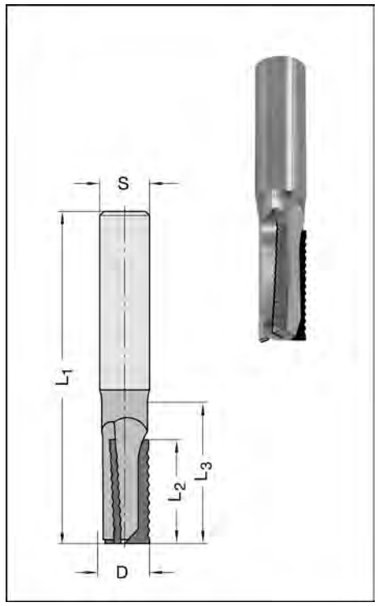

14256

D mm	L_2 mm	L_3 mm	L_1 mm	T.H. mm	Shank mm	Part-No.
12	10	19	70	3,0	12 x 45	14256-9-12102-R
12	15	24	70	3,0	12 x 40	14256-9-12152-R
12	20	29	75	3,0	12 x 40	14256-9-12202-R
12	25	34	80	3,0	12 x 40	14256-9-12252-R
14	15	23	70	4,0	14 x 40	14256-9-14151-R
14	20	28	75	4,0	14 x 40	14256-9-14201-R
14	25	33	80	4,0	14 x 40	14256-9-14251-R
16	10	25	80	4,5	16 x 50	14256-9-16103-R
16	15	30	80	4,5	16 x 45	14256-9-16153-R
16	20	30	80	4,5	16 x 45	14256-9-16203-R
16	25	30	80	4,5	16 x 45	14256-9-16253-R
16	30	35	85	4,5	16 x 45	14256-9-16303-R
16	35	40	90	4,5	16 x 45	14256-9-16353-R
20	10	15	85	4,5	20 x 60	14256-9-20105-R
20	15	20	85	4,5	20 x 60	14256-9-20155-R
20	20	25	85	4,5	20 x 55	14256-9-20205-R
20	25	30	90	4,5	20 x 55	14256-9-20255-R
20	30	35	95	4,5	20 x 55	14256-9-20305-R

Technical details
* tool body made of solid tungsten carbide
* periphery tips and plunge tip made from pcd
* alternative shear cut (2 negative; 1 positive)
* roughing ground
* several times regrindable

Application
* roughing, grooving, sizing, severing (nesting) and rebating of particularly abrasive workpiece materials
* applicable for axial- and ramp plunge cutting

Special advantages
* roughing ground for increased chip volume and reduced cutting force

Application data
* Heat-setting material/Thermoplastics / HPL: R.P.M. = 15 000 - 18 000, v_f = 5 - 9 m/min
* Solid surface: R.P.M. = 15 000 - 18 000, v_f = 8 - 12 m/min
* Wood based panels: R.P.M. = 18 000 - 24 000, v_f = 15 - 25 m/min

Diatec

Z2+2

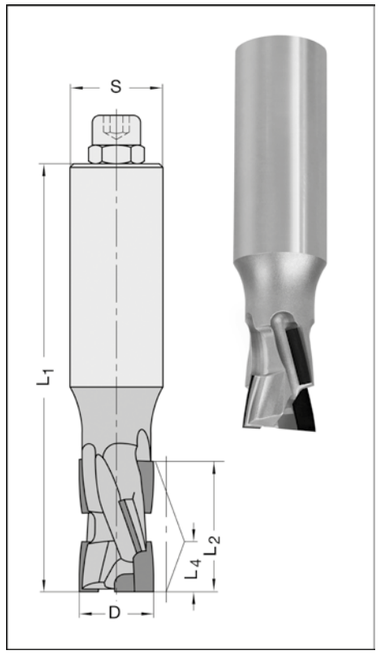

14300

D mm	L_2 mm	L_4 mm	L_1 mm	T.H. mm	Shank mm	Part-No.
20	25	13,5	105	4,5	25 x 60 m. E. M 8	14300-9-20256-L
20	25	13,5	105	4,5	25 x 60 m. E. M 8	14300-9-20256-R
20	35	13,5	115	4,5	25 x 60 m. E. M 8	14300-9-20356-R

Technical details
* tool body made of steel
* TC plunge tip
* nickel coated design
* alternative shear cut
* up to 10 times regrindable

Application
* grooving, sizing, severing and rebating on wood based panels. Especially applicable for MDF, raw
* applicable for axial- and ramp plunge cutting

Application data
R.P.M. = 18 000 - 24 000
v_f = 5 - 15 m/min (lower adjustment up to 20 m/min)

Diatec-PRO DUO

Z2+2

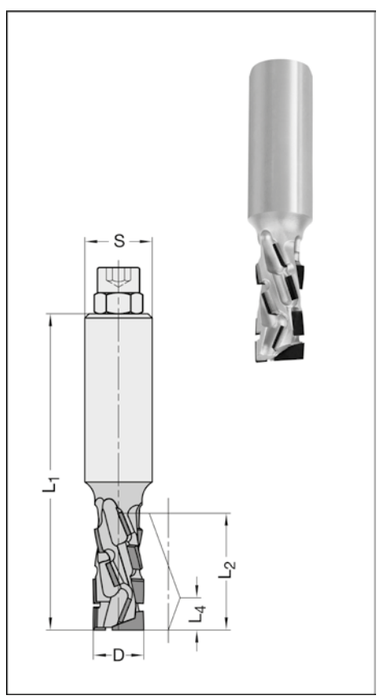

14310

D mm	L_2 mm	L_4 mm	L_1 mm	T.H. mm	Shank mm	Part-No.
10*	22	6	70	3,0	10 x 40	14310-9-10022-R
12**	24	8	70	3,0	12 x 40	14310-9-12242-R
12**	28	7,5	75	3,0	16 x 40 m. E. M 6	14310-9-12283-R
16	28	8	85	3,0	16 x 40 m. E. M 6	14310-9-16283-R
16**	42	8	100	3,0	16 x 50 m. E. M 6	14310-9-16423-R
18	28	8	93	4,5	25 x 55 m. E. M 8	14310-9-18286-R
18	35	8	105	4,5	25 x 55 m. E. M 8	14310-9-18356-R
18	42	9	110	4,5	25 x 55 m. E. M 8	14310-9-18426-R
20	28	8	105	4,5	25 x 55 m. E. M 8	14310-9-20286-L
20	28	8	105	4,5	25 x 55 m. E. M 8	14310-9-20286-R
20	42	8	110	4,5	25 x 55 m. E. M 8	14310-9-20426-L
20	42	8	110	4,5	25 x 55 m. E. M 8	14310-9-20426-R
25	48	8	120	4,5	25 x 55 m. E. M 8	14310-9-25486-R

Technical details
* tool body made of steel, solid TC (*), or high-density metal (**)
* nickel coated (design with steel tool body)
* perphery tips and plunge tip made from pcd
* alternative shear cut
* several times regrindable

Application
* grooving, sizing and severing of classically wood composites

Special advantages
* consistently Z2+2 tipping on 4 flutes
* long tool life when used on nesting machines
* very well suited for use with dust extraction turbines

Application data
R.P.M. = 18 000 - 24 000
v_f = 8 - 16 m/min

Diatec-PRO TRIO

Z3+3

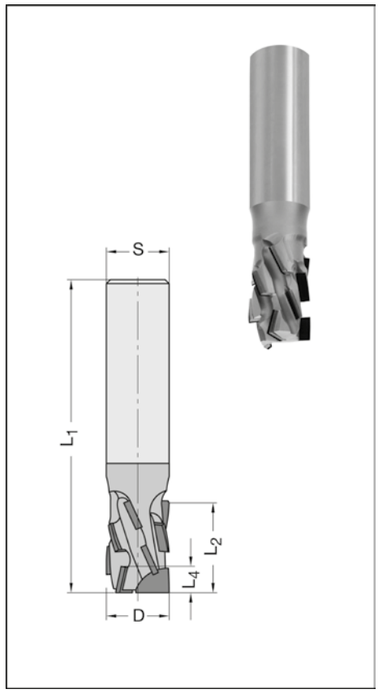

14330

D mm	L_2 mm	L_4 mm	L_1 mm	T.H. mm	Shank mm	Part-No.
12*	22	4,3	80	2,5	12 x 40	14330-9-12222-R
16	23	6,7	80	3,0	16 x 40 m. E. M 6	14330-9-16233-R
16	34	6,7	85	3,0	16 x 40 m. E. M 6	14330-9-16343-R
18	42	8	110	3,0	25 x 55 m. E. M 8	14330-9-18426-L
18	42	8	110	3,0	25 x 55 m. E. M 8	14330-9-18426-R
20	42	8	110	3,0	25 x 55 m. E. M 8	14330-9-20426-R
25	42	8	110	3,0	25 x 55 m. E. M 8	14330-9-25426-R

Technical details
* tool body made of steel, or high-density metal (*)
* nickel coated (design with steel tool body)
* perphery tips and plunge tip made from pcd
* alternative shear cut
* several times regrindable

Application
* grooving, sizing and severing of classically wood composites

Special advantages
* consistently Z3+3 tipping on 6 flutes
* improved life time and cutting quality compare to classcially Z3 tools

Application data
R.P.M. = 18 000 - 24 000
v_f = 15 - 25 m/min

Diatec-WOOD

Z2+2

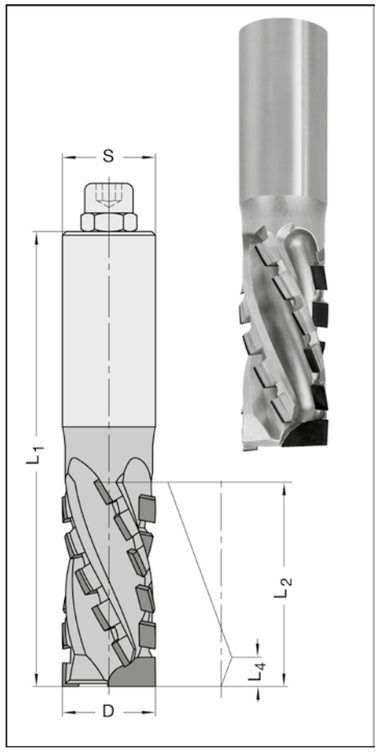

15530

D mm	L_2 mm	L_4 mm	L_1 mm	T.H. mm	Shank mm	Part-No.
25	55	8	125	4,5	25 x 55 m. E. M 8	15530-9-25556-R

Technical details
* tool body made of steel
* nickel coated
* periphery tips and plunge tip made of pcd
* alternative shear cut
* up to 10 times regrindable

Application
* grooving, sizing, severing and rebating of **solid wood**
* applicable for axial- and ramp plunge cutting

Special advantages
* cutting edge geometry especially for solid wood

Application data
R.P.M. = 18 000 - 24 000
v_f = 5 - 15 m/min

Diamond Milling Cutters

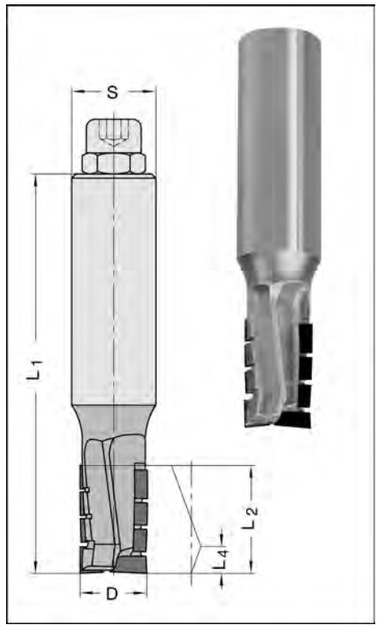

15540

D mm	L_2 mm	L_4 mm	L_1 mm	T.H. mm	Shank mm	Part-No.
16	25	6,5	95	3,0	20 x 55 m. E. M 8	15540-9-16255-R

Technical details
* tool body made of steel
* nickel coated
* periphery tips and plunge tip made of pcd
* alternative shear cut
* large chip space
* up to 3 times regrindable

Application
* grooving, sizing, severing and rebating of mulitplex
* applicable for axial- and ramp plunge cutting

Special advantages
* cutting edge geometry especially for machining multiplex

Application data
R.P.M. = 18 000 - 24 000
v_f = 5 - 10 m/min

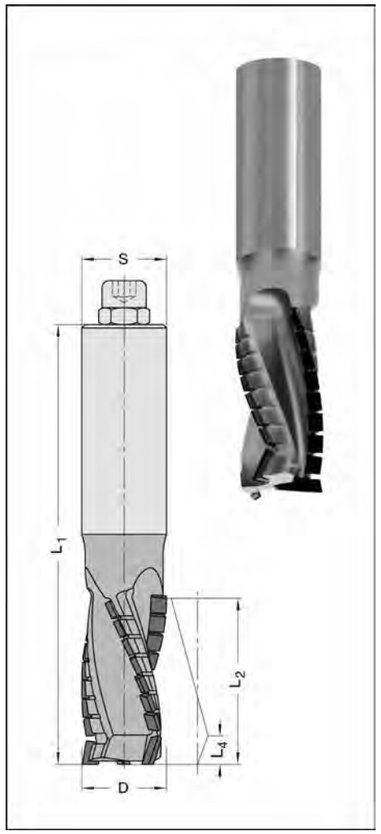

15551 chip removal downwards

D mm	L_2 mm	L_4 mm	L_1 mm	T.H. mm	Shank mm	Part-No.
12,7	28	7	80	3,0	12 x 45	15551-9-12701-L
12,7	28	7	80	3,0	12 x 45	15551-9-12701-R
16	25	7,5	100	4,5	20 x 55 m. E. M 8	15551-9-16255-R
16	35	7,5	110	4,5	20 x 55 m. E. M 8	15551-9-16355-L
16	35	7,5	110	4,5	20 x 55 m. E. M 8	15551-9-16355-R
20	28	7	110	4,5	25 x 60 m. E. M 8	15551-9-20286-R
20	38	7	120	4,5	25 x 60 m. E. M 8	15551-9-20386-L
20	38	7	120	4,5	25 x 60 m. E. M 8	15551-9-20386-R
20	48	7	125	4,5	20 x 55 m. E. M 8	15551-9-20485-R
20	48	7	130	4,5	25 x 60 m. E. M 8	15551-9-20486-L
20	48	7	130	4,5	25 x 60 m. E. M 8	15551-9-20486-R
25	28	8,5	110	4,5	25 x 60 m. E. M 8	15551-9-25286-L
25	28	8,5	110	4,5	25 x 60 m. E. M 8	15551-9-25286-R
25	38	8,5	120	4,5	25 x 60 m. E. M 8	15551-9-25386-L
25	38	8,5	120	4,5	25 x 60 m. E. M 8	15551-9-25386-R
25	48	8,5	130	4,5	25 x 60 m. E. M 8	15551-9-25486-L
25	48	8,5	130	4,5	25 x 60 m. E. M 8	15551-9-25486-R

Technical destails
* tool body made of steel
* nickel coated
* periphery tips and plung tip made of pcd
* alternative shear cut
* chip removal downwards (short L4 dimension)
* chip removal downwards (**negative** spiral)
* support the clamping of smaller workpieces
* up to 7 times regrindable

Application
* grooving sizing and severing of classically wood composites
* especially applicable for chip- and MDF board, laminated, paper coated or veneered
* applicable for axial- and ramp plunge cutting

Application data
R.P.M. = 18 000 - 24 000
v_f = 10 - 20 m/min

Diamond Milling Cutters

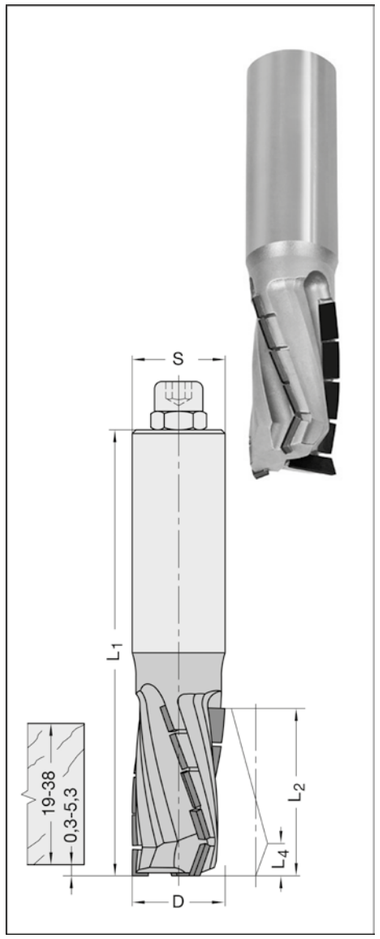

15552

D mm	L_2 mm	L_4 mm	L_1 mm	T.H. mm	Shank mm	Part-No.
18	45	9	120	4,5	25 x 60 m. E M 8	15552-9-18456-L
18	45	9	120	4,5	25 x 60 m. E M 8	15552-9-18456-R
25	45	9	120	4,5	25 x 60 m. E M 8	15552-9-25456-L
25	45	9	120	4,5	25 x 60 m. E M 8	15552-9-25456-R

Technical details
* tool body made of steel
* nickel coated
* periphery tips and plunge tip made of pcd
* alternative shear cut
* chip removal downwards (negative spiral)
* large Z3 ranges
* up to 10 times resharpenable

Application
* grooving, sizing and severing of classically wood composites
* large Z3 ranges allow oscillating cutting

Special advantages
* optimized for standard board thicknesses
* ideal Z3-use by accompanying magnetic tool card

Application data
R.P.M. = 18 000 - 24 000
v_f = 13 - 26 m/min

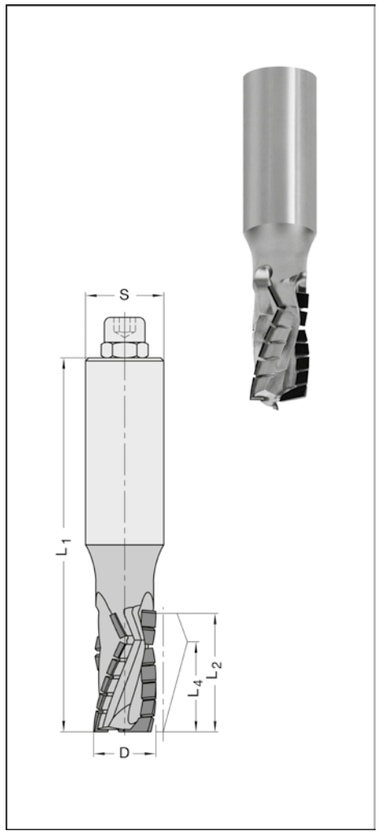

15553 chip removal upwards

D mm	L_2 mm	L_4 mm	L_1 mm	T.H. mm	Shank mm	Part-No.
16	35	29	110	3,0	20 x 55 m. E. M 8	15553-9-16355-R
20	28	17,5	110	4,5	25 x 60 m. E. M 8	15553-9-20286-R
20	38	29	120	4,5	25 x 60 m. E. M 8	15553-9-20386-R
20	48	40	125	4,5	25 x 60 m. E. M 8	15553-9-20486-R
25	38	29	120	4,5	25 x 60 m. E. M 8	15553-9-25386-L
25	38	29	120	4,5	25 x 60 m. E. M 8	15553-9-25386-R
25	48	40	130	4,5	25 x 60 m. E. M 8	15553-9-25486-R

Technical details
* tool body made of steel
* nickel coated
* periphery tips and plung tip made of pcd
* alternative shear cut
* chip removal upwards (long L4 dimension)
* chip removal upwards (**positive** spiral)
* up to 7 times regrindable

Application
* grooving sizing and severing of classically wood materials
* especially applicable for chip- and MDF board, laminated, paper coated or veneered
* applicable for axial- and ramp plunge cutting

Application data
R.P.M. = 18 000 - 24 000
v_f = 10 - 20 m/min

Diamond Milling Cutters

Diamatic-TRIO

Z3

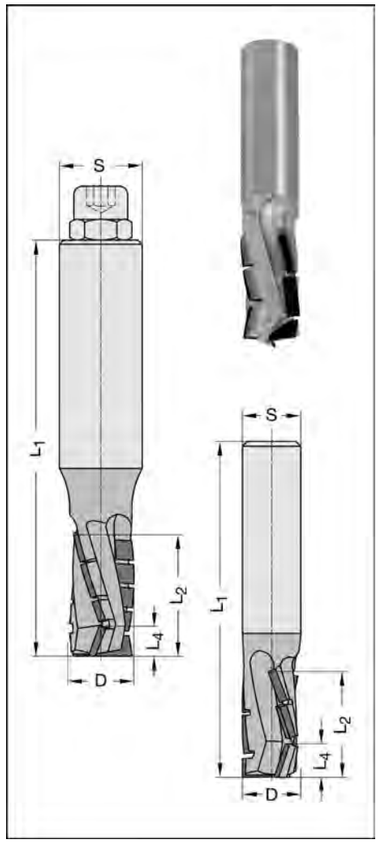

15555 high performance design

D mm	L_2 mm	L_4 mm	L_1 mm	T.H. mm	Shank mm	Part-No.
12	22	7	75	3,0	12 x 45	15555-9-12222-R
12,7	28	7	85	3,0	12 x 45	15555-9-12701-R
12,7	28	7	85	3,0	12,7 x 45	15555-9-12728-R
16	21	6,5	85	4,5	20 x 55 m. E. M 8	15555-9-16215-R
16	29	6,5	100	4,5	20 x 55 m. E. M 8	15555-9-16295-R
18	52	13	130	4,5	20 x 64 m. E. M 8	15555-9-18525-R

Technical details
* tool body made of high-density metal
* periphery tips and plunge tip made of pcd
* alternative shear cut
* several times regrindable

Application
* grooving, sizing and severing of classically wood materials
* applicable to axial- and ramp plunge cutting

Special advantages
* for nesting machining
* high performance design thanks to tool body made of high-density metal

Application data
R.P.M. = 18 000 - 24 000
v_f = 15 - 35 m/min

Diamatic-QUATTRO

Z4

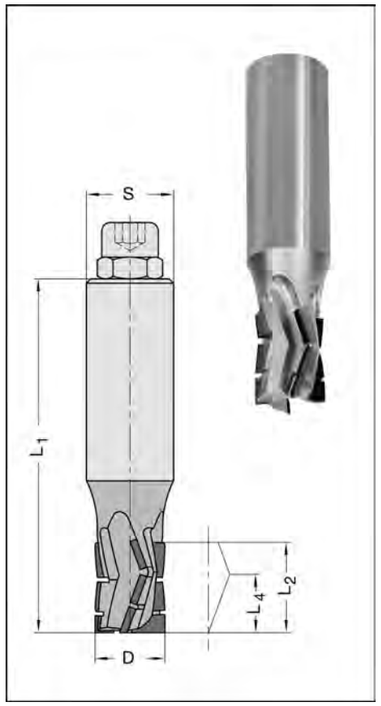

15556

D mm	L_2 mm	L_4 mm	L_1 mm	T.H. mm	Shank mm	Part-No.
16	21	12,7	85	3,0	20 x 55 m. E. M 8	15556-9-16215-R

Technical details
* tool body made of high-density metal
* periphery tips and plunge tip made of pcd
* alternative shear cut
* several times resharpenable

Application
* grooving, sizing and severing of chip- and MDF-boards
* applicable for axial- and ramp plunge cutting

Special advantages
* especially applicable for nesting operation
* optimal for board thicknesses of 16 mm and 19 mm

Application data
R.P.M. = 18 000 - 24 000
v_f = 20 - 40 m/min

Diamond Milling Cutters

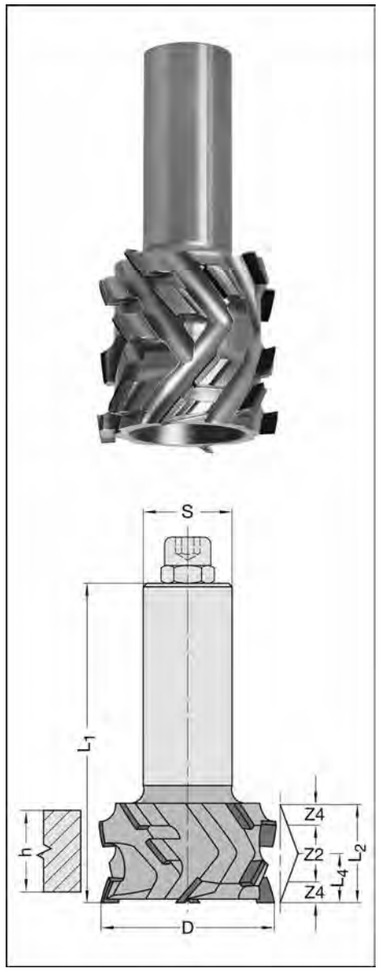

15600

D mm	L_2 mm	L_4 mm	h mm	L_1 mm	T.H. mm	Shank mm	Part-No.
50	22	12,5	10 - 19	85	4,5	25 x 60	15600-9-50226-R
50	28	12	16 - 25	90	4,5	25 x 60	15600-9-50286-R
50	48	25	25 - 45	110	4,5	25 x 60	15600-9-50486-R

Technical details
* tool body made of steel
* nickel coated
* alternative shear cut
* up to 7 times resharpenable

Application
* sizing, rebating and severing of classically wood composites

Special advantages
* very well edge quality also on high cutting speed
* on the outside section Z4, in the centre position Z2

Application data
R.P.M. = 18 000 - 24 000
v_f = 20 - 35 m/min

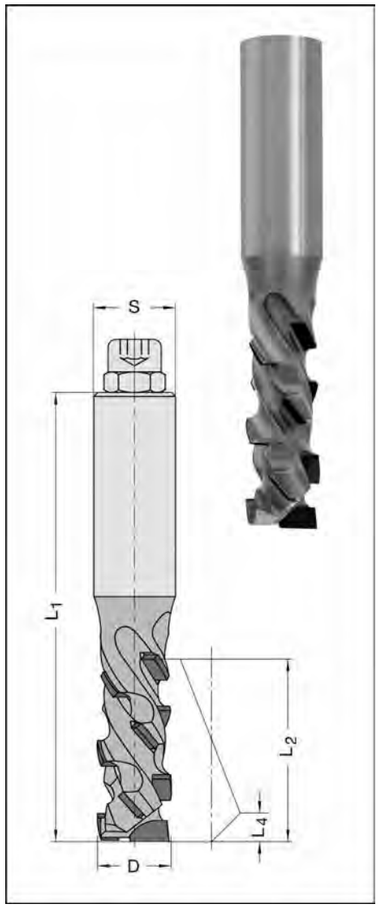

15700

D mm	L_2 mm	L_4 mm	L_1 mm	T.H. mm	Shank mm	Part-No.
18	48	6	110	4,5	20 x 50 m. E. M8	15700-9-18485-R
25	28	6,5	95	4,5	25 x 55 m. E. M 8	15700-9-25286-R

Technical details
* tool body made of steel
* nickel coated
* alternative shear cut
* up to 7 times resharpenable

Application
* sizing, grooving and severing on classically wood composites

Special advantages
* extreme shear angle
* very well edge quality also on high feed speed
* especially efficient on veneered wood composites

Application data
R.P.M. = 18 000 - 24 000
v_f = 5 - 15 m/min

Diamond Milling Cutters

Gigaspeed-DUO

Z2

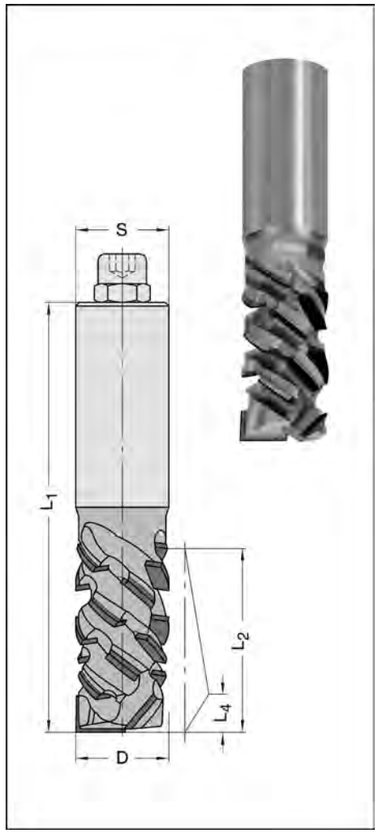

15700

D mm	L_2 mm	L_4 mm	L_1 mm	T.H. mm	Shank mm	Part-No.
12*	24	6	70	2,5	12 x 35	15700-9-12242-R
16	35	5	85	2,5	16 x 40 m. E. M 6	15700-9-16353-R
18	43	5	105	3,5	20 x 50 m. E. M 8	15700-9-18435-R
20	43	8	105	3,5	20 x 50 m. E. M 8	15700-9-20435-R
25	48	10	115	4,5	25 x 55 m. E. M 8	15700-9-25486-R

Technical details
* tool body made of steel or solid tungsten carbide (*)
* nickel coated
* alternative shear cut
* up to 5 times regrindable

Application
* sizing, grooving and severing of classically wood composites

Special advantages
* extreme shear angle
* very well edge quality also on high feed speed
* especially efficient on veneered wood composites
* especially good results on the exit cut on the edge banding process

Application data
R.P.M. = 18 000 - 24 000
v_f = 12 - 25 m/min

Gigaspeed-TRIO

Z3

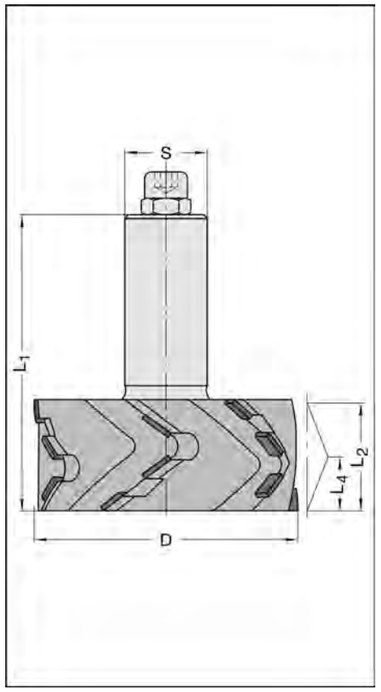

15700

D mm	L_2 mm	L_4 mm	L_1 mm	T.H. mm	Shank mm	Part-No.
50	48	25	110	4,0	25 x 55 m. E. M 8	15700-9-50486-R
80	32	16	90	4,0	25 x 55 m. E. M 8	15700-9-80326-R
80	81,5	42,5	145	4,0	25 x 55 m. E. M 8	15700-9-80856-R

Technical details
* tool body made of steel
* nickel coated
* alternative shear cut
* up to 6 times regrindable

Application
* sizing of classically panel materials and solid wood

Special advantages
* extreme shear angle
* very well edge quality also on high feed speed
* high cutting speed thanks to large cutting circle diameter
* especially efficient on veneered panel materials

Application data
R.P.M. = 19 000 - 24 000 (D 50 x 48 mm)
R.P.M. = 11 000 - 16 000 (D 80 x 32 mm)
R.P.M. = 10 000 - 15 000 (D 80 x 81,5 mm)
v_f = 20 - 45 m/min

Gigaspeed-PARTICLE

Z3

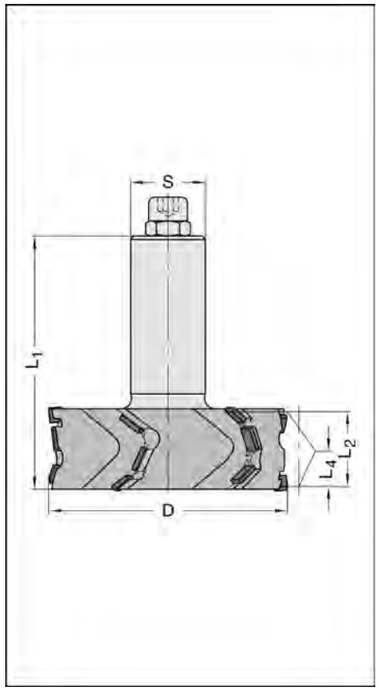

15750

D mm	L_2 mm	L_4 mm	L_1 mm	T.H. mm	Shank mm	Part-No.
80	25	13	85	4,5	25 x 55 m. E. M8	15750-9-80256-R

Technical details
* tool body made of steel
* nickel coated
* alternative shear cut
* up to 6 times regrindable

Application
* sizing of laminated chipboard 16 - 22 mm

Special advantages
* very well edge quality also on high feed rates

Application data
R.P.M. = 15 000 - 18 000
v_f = 20 - 50 m/min

Diamond Milling Cutters

4Cut PCD Roughing Cutters

Z2

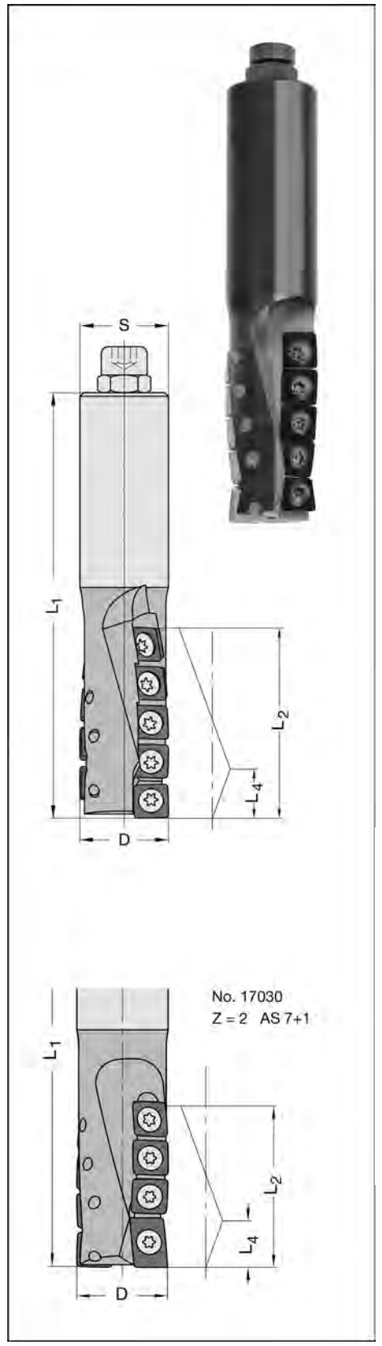

17030

D mm	L_2 mm	L_4 mm	L_1 mm	AS	Shank mm	Part-No.
25	40*	12,6	120	7+1	25 x 55 m. E. M 8	17030-9-25406-R
25	54*	13,9	120	10	20 x 55 m. E. M 8	17030-9-25505-R
25	54*	13,9	120	10	25 x 55 m. E. M 8	17030-9-25506-R

AS = number of cutting edges (tips)
* The last 4 or 5 mm on shank side with single cutting edge (Z1).

Technical details
* tool body made of steel
* burnished
* tips helically positioned
* 4- resp. 2-sided reversible pcd tips

Application
* grooving, sizing, severing and rebating of classically wood composites
* type AS 7+1 with rebate tip
* combined use of pcd and solid TC tips possible (see page 4.10)

Application data
R.P.M. = 18 000 - 24 000
v_f = 8 - 15 m/min

Special advantages
● reversible pcd tips with 4 life times
● reversible pcd rebated tip with 2 life times for 90° rebate
● easy changing and turning of tips in case of damaging or blunting

Spare parts / Accessories		Part-No.
Reversible PCD tip	9,8 x 9,8 x 2,0 mm, 4-sided, convex design	72014-9-09800-0
Reversible PCD tip	14 x 9,8 x 2,0 mm, 2-sided, convex design 90° corner	72014-9-14980-0
Torx-srew	M 4 x 6, T15, with centring collar, for D = 20 mm	39081-0-04006-R
Torx-srew	M 4 x 7, T15, with centring collar, for D = 25 mm	39081-0-04070-R
Torx key	T15, with handle	39077-0-04015-2

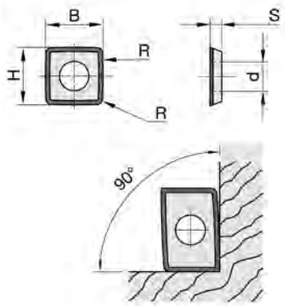

4Cut PCD Surfacing Cutters

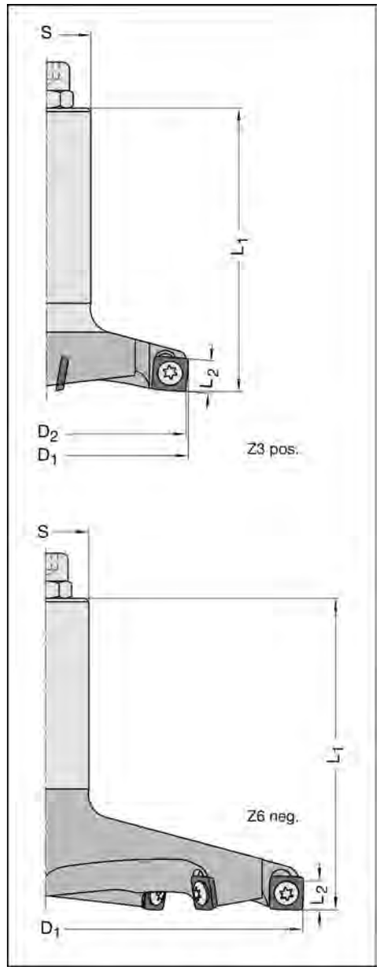

17525 Z3 positive

D_1/D_2 mm	L_2 mm	L_1 mm	Shank mm	Part-No.
82/80	8	80	25 x 55 m. E. M 8	17525-9-80006-R
122/120	8	85	25 x 55 m. E. M 8	17525-9-12006-R

Technical details
* tool body made of steel
* burnished
* positive shear angle
* mechanical feed

Application
* surfacing of all common panel materials (wood and plastics)

Application data
R.P.M. = 10 000
v_f = 10 - 20 m/min

Reversible PCD tips exchangeable against solid TC, No. 20525-5 (page 4.20), No. 72014-6 (page 7.4)

17525 Z6 negative

D_1 mm	L_2 mm	L_1 mm	Shank mm	Part-No.
150	8	90	25 x 55 m. E. M 8	17525-9-15006-R

Technical details
* tool body made of steel
* burnished
* negative shear angle
* mechanical feed

Application
* surfacing of all common panel marterials (wood and plastics)
* especially for surfacing of nesting spoil boards (MDF)

Application data
R.P.M. = 9 000
v_f = 12 - 30 m/min

Reversible PCD tips exchangeable against solid TC tips, No. 20525-5 (page 4.20), No. 72014-6 (page 7.4)

Spare parts / Accessories		Part-No.
Reversible PCD tip	9,8 x 9,8 x 2,0 mm, 4-sided, convex design	72014-9-09800-0
Torx-srew	M 4 x 7, T15, with centring collar, spec. design	39081-0-04070-R
Torx key	T15, with handle	39077-0-04015-2

Diamond Milling Cutters

PCD V-Groove / Engraving Cutter

Z1

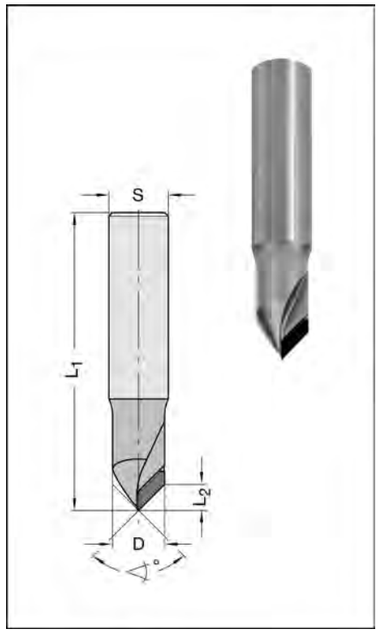

16010

Angle	D mm	L_2 mm	L_1 mm	T.H. mm	Shank mm	Part-No.
90°	14	7	80	3,5	16 x 50	16010-9-14453-R

Technical details
* tool body made of steel
* nickel coated

Application
* for machining of V-grooves, decorative grooves, lettering or bevelling of HPL and classically wood composites
* not aplicable for machining of Alucobond boards

Application data
R.P.M. 18 000 - 24 000
v_f = 3 - 8 m/min

PCD V-Groove / Bevelling Cutters

Z2

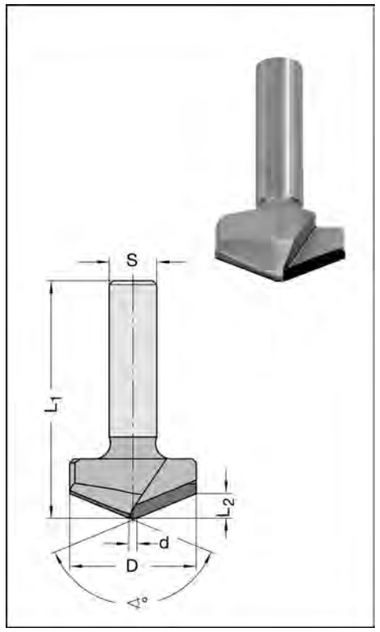

16010

Angle	D mm	d mm	L_2 mm	L_1 mm	T.H. mm	Shank mm	Part-No.
90°	18	3	7,5	60	3,5	12 x 45	16010-9-18452-R
135°	32	2	6,2	60	3,5	12 x 40	16010-9-32222-R
90°	63	3	30	95	3,5	25 x 60	16010-9-63456-R

Technical details
* tool body made of steel
* nickel coated

Application
* for machining of V-grooves, decorative grooves or bevelling of HPL and classically wood composites
* applicable for machining of Alucobond boards

Application data
R.P.M. = 18 000 - 24 000
v_f = 3 - 8 m/min

PCD Edge Rounding Cutters

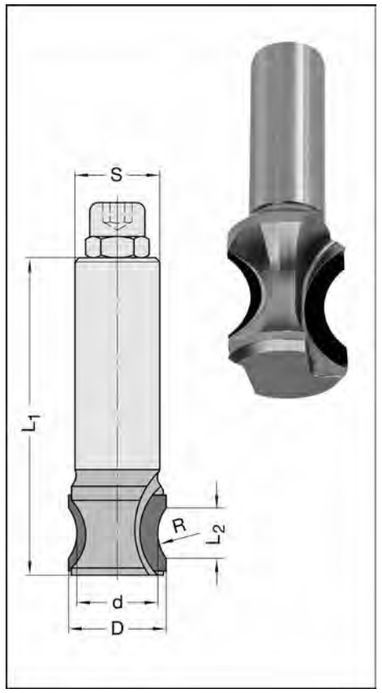

16030 Z2

R mm	d mm	D mm	L_2 mm	L_1 mm	T.H. mm	Shank mm	Part-No.
10	19,1	23,0	11,9	75	3,5	20 x 50	16030-9-23105-R
16	20,0	26,0	17	85	4,5	20 x 50	16030-9-26165-R
16	18,0	31,6	24	95	5,0	20 x 50	16030-9-32165-R
25	29,2	34,8	22,2	95	5,0	20 x 50	16030-9-35255-R

16030 Z2+2

R mm	d mm	D mm	L_2 mm	L_1 mm	T.H. mm	Schaft mm	Part-No.
25	40,0	52,4	33	117	6,5	20 x 55	16030-9-52255-R

Technical details
* tool body made of steel
* nickel coated
* alternative shear cut
* several times regrindable

Application
* for convex edge rounding
* machining of HPL and classically wood composites

Application data
R.P.M. = 18 000 - 24 000
v_f = 3 - 8 m/min

4CUT PCD Decorative Groove Cutter

Z1

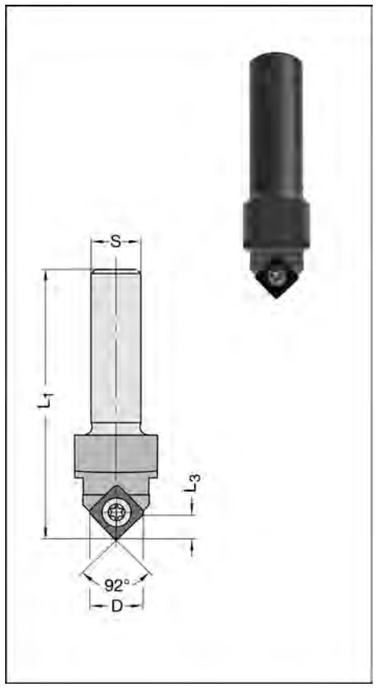

17600

D mm	L_3 mm	L_1 mm	Shank mm	Part-No.
12,9	5,6	65	8 x 40	17600-9-12900-R
12,9	5,6	65	12 x 40	17600-9-12902-R

Technical details
Tempered tool body supplied with one reversible diamond (PCD) tip, profiled on 4-sides.
With shear cut from top. For manual and mechanical feed. Right-hand rotation.

Application
* for machining decorative grooves, lettering or for bevelling on HPL or classically wood composites

Application data
R.P.M. = 12 000
v_f = 0,5 - 2 m/min

Spare parts / Accessories		Part-No.
Reversible PCD tip	9,8 x 9,8 x 2 mm, 4-sided	72014-9-09800-4
Torx-srew	M 4 x 7, T15, with centring collar, spec. design	39081-0-04070-R
Torx key	T15, with handle	39077-0-04015-2

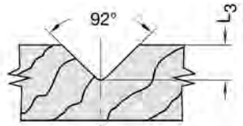

Diamond Milling Cutters

PCD Grooving Cutter

Z3

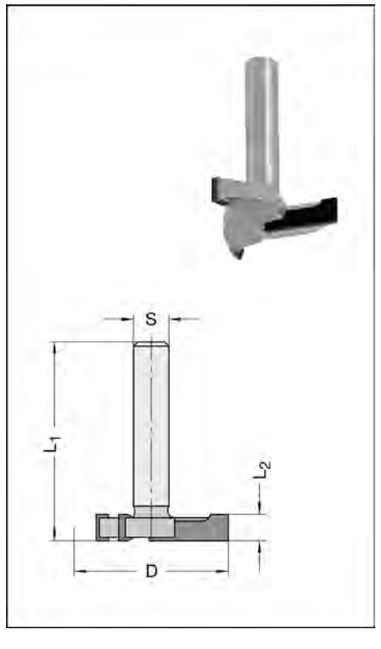

16020-9 Connector system "Fixchip"

D mm	L_2 mm	L_1 mm	T.H. mm	Shank mm	Part-No.
35	6	45	-	8 x 35	16020-9-35600-R

Technical details
* tool body made of steel
* nickel coated
* cutting edges made of pcd

Application
* lateral grooving for fixchip connections

Special advantages
* long life time thanks to pcd cutting edges
* optimally adapted for use on nesting machines

Application data
R.P.M. = 18 000 - 24 000
v_f = 3 - 8 m/min

PCD Profile Cutter

Z2+1

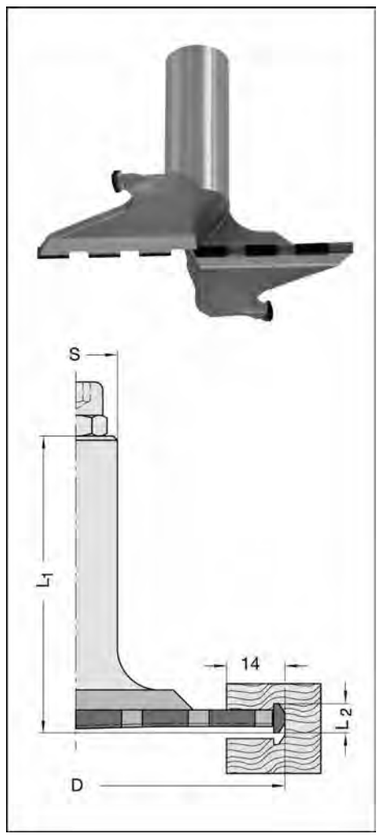

16020-9 Connector system "Clamex"

D mm	L_2 mm	L_1 mm	T.H. mm	Shank mm	Part-No.
100,4	5,4	71	5,0	20 x 50	16020-9-10045-R

Technical details
* cutter body made of steel
* mechanical feed

Application
* for machining the Lamello Clamex system groove in classically wood composites
* especially for the application on nesting machines
* applicable for axial plunging
* circular pocket and Lamello system groove in one tool

Application data
R.P.M. = 16 000 - 18 000
v_f = 0,5 - 1,5 m/min

PCD Grooving Cutters

Z3

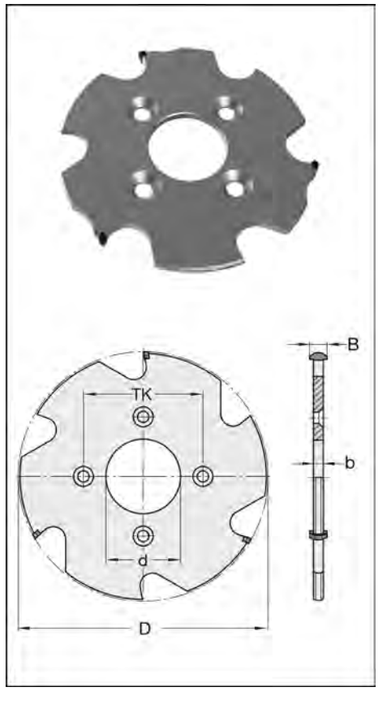

40190 Connector system "Clamex"

D mm	B mm	b mm	d mm	T.H. mm	NL pcs./ø/pcd	Part-No.
Usable with the Lamallo Zeta P2						
100,4	7,0	4,0	22	3,0	4/4,5/36 *	40190-9-00001-V
Usable with JSO arbors No. 21079 and No. 39498						
100,4	7,0	4,0	22	3,0	4/6,5/36	40190-9-00003-V
100,4	7,0	4,0	30	3,0	4/6,5/48	40190-9-00002-V

Appropriate arbors no. 21079 (page 6.13) and no. 39498 (page 6.7)

Technical details
* tool body made of steel
* mechanical and manual feed

Application
* for machining the Lamello Clamex P® - system groove in classically wood composites

Application data
R.P.M. = 18 000 - 24 000
v_f = 2,5 - 8 m/min

40190-9 assembled on arbor No. 21079, cylindrical shank

D mm	B mm	d mm	Shank mm	Part-No.
100,4	7,0	22	16 x 65 m. E.	40190-9-10223-R
100,4	7,0	30	16 x 65 m. E.	40190-9-10303-R
100,4	7,0	30	20 x 65 m. E.	40190-9-10305-R
100,4	7,0	22	25 x 65 m. E.	40190-9-10226-R
100,4	7,0	30	25 x 65 m. E.	40190-9-10306-R

PCD Grooving Saw Blades

Z6

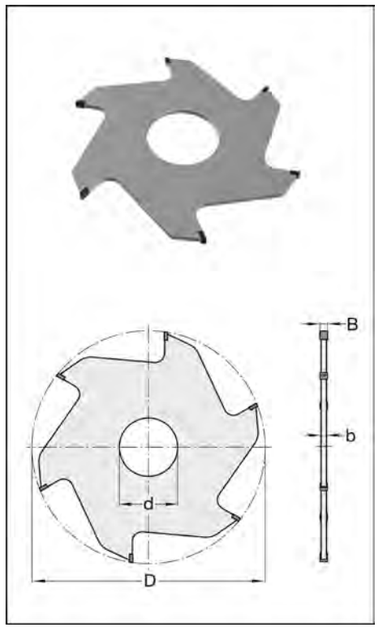

40180

D mm	B mm	b mm	d mm	T.H. mm	Part-No.
100	3,0	2,2	30	4,0	40180-9-10030-0
100	4,0	2,8	30	4,0	40180-9-10040-0
100	5,0	3,2	30	4,0	40180-9-10050-0

TCT Grooving saw blades No. 40150/40160 page 4.59

Technical details
* tool body made of steel
* square teeth design
* mechanical feed
* several times regrindable

Application
* grooving of classically wood composites
* usable with arbors No. 21079 (page 6.13) and No. 39498-0 (page 6.7)

Application data
R.P.M. = 8 000 - 12 000
v_f = 8 - 15 m/min

Extra cost for:
- enlarging bore, No. 39710-0-01000-0
- adaption of keyway, No. 39720-0-01000-0
- drilling countersunk holes for arbor No. 21079, No. 39745-0-00004-0

see pages 7.31 - 7.32

Diamond Milling Cutters

Dianova Jointing Cutters

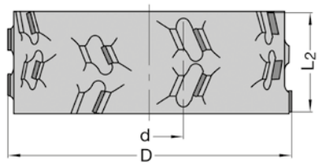

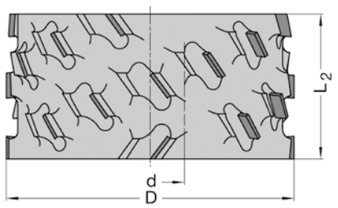

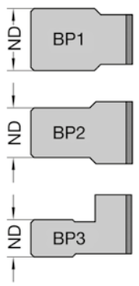

41650 Z2

D mm	L_2 mm	L_4 mm	T.H. mm	d mm	Machine	Part-No.
Cutting edge design asymmetrical, boss pos. 3, ND= 41 mm						
70	48	9,5	3,0	30 DKN	HolzHer Aggr. 1801	41650-9-07048-R
70	48	9,5	3,0	30 DKN	HolzHer Aggr. 1801	41650-9-07048-L
Cutting edge design asymmetrical, boss pos. 3, ND= 39,5 mm						
70	64	9,5	3,0	30 DKN	HolzHer Aggr. 1801	41650-9-07064-R
70	64	9,5	3,0	30 DKN	HolzHer Aggr. 1801	41650-9-07064-L

41650 Z3

D mm	L_2 mm	L_4 mm	T.H. mm	d mm	Machine	Part-No.
Cutting edge design asymmetrical, boss pos. 1, ND= 45 mm						
85	43	9,5	3,0	30 DKN	Ott	41650-9-08543-R
85	43	9,5	3,0	30 DKN	Ott	41650-9-08543-L
Cutting edge design asymmetrical, boss pos. 1, ND= 36 mm						
100	34	9,5	3,0	30 DKN	IMA, Brandt	41650-9-10034-R
100	34	9,5	3,0	30 DKN	IMA, Brandt	41650-9-10034-L
Cutting edge design asymmetrical, boss pos. 3, ND= 41 mm						
100	48	9,5	3,0	30 DKN	IMA, Brandt, SCM	41650-9-10048-R
100	48	9,5	3,0	30 DKN	IMA, Brandt, SCM	41650-9-10048-L
100	63	9,5	3,0	30 DKN	IMA, Brandt, SCM	41650-9-10063-L
Cutting edge design convex symmetrical, boss pos. 2, ND= 41 mm						
125	43	-	3,0	30 DKN	Homag, Biesse	41650-9-12543-0

Technical details
* tool body made of steel
* nickel coated
* alternative shear cut
* JSO-tip-protector
* several times regrindable

Application
* jointing of classically panel matrials. With or without feed on edge banding machines

Special advantages
* JSO-tip protector support the chip flow and has positive effects on the life time

Cutting edge design

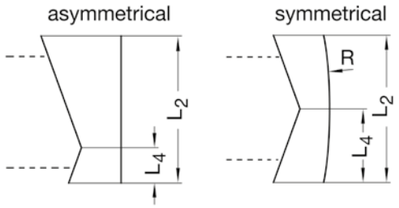

PCD Router Cutters

special production

16020 T-slot router cutter Z2+1

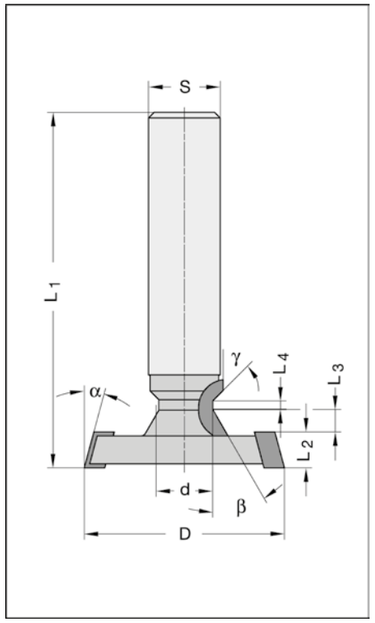

Technical details
* on large diameter (D) two straight or bevelled pcd cutting edges
* cutting on periphery, top and bottom, with or without shear angle
* on small diameter (d) one straight or profiled pcd cutting edge, with or without shear angle
* on request with length adjusting screw on shank

Application
* for machining T-slots in classically wood composites and plastics
* for use in mechanical - and / or manual feed

On demand
Order information: Dimensions as per drawing or cad-datas

Examples of profiles

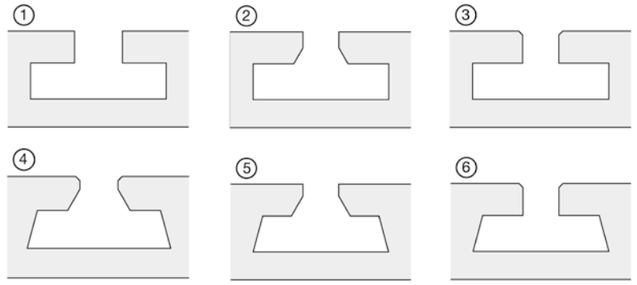

16035 PCD profile router cutter Z3 (nesting)

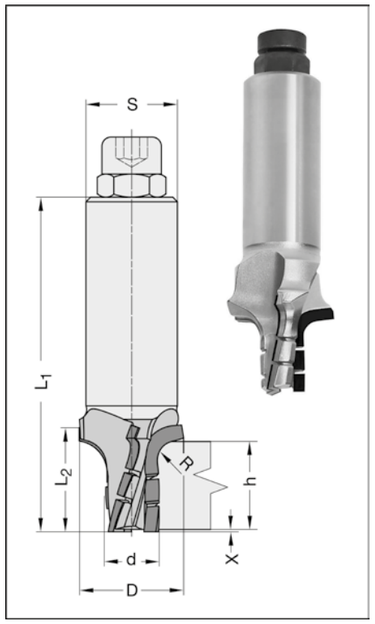

Technical details
* on large diameter (D) three continous pcd cutting edges for edge rounding, bevelling or profiling, with shear angle
* on small diameter (d) three helically wings, fully tipped (Z=3)
* several times regrindable

Application
* for severing and simultaneous profiling of classically wood comosites and plastics on nesting machines
* diameter, cutting edge layout and edge geometry will be determined corresponding to profile, material thickness (h), R.P.M. and feed rate for optimum performance
* for use in mechanical feed, righthand rotation

Special advantages
* minimised cutting force and feed force

On demand
Order information: Dimensions as per drawing or cad-datas

Clamping Tools

Precision creates value

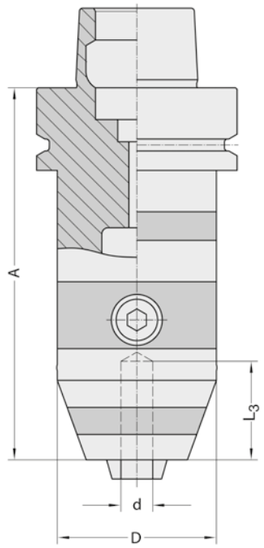

21030

Shank mm	L_3 mm	A mm	D mm	d mm	Part-No.
HSK-F 63	32	111 - 120	50	1 - 13	21030-0-13063-0
HSK-F 63	32	115 - 123	50	3 - 16	21030-0-16063-0

Supplied with key.

Technical details

High-precision design ensuring high concentricity, thoroughly balanced.
Tempered jaws provide special protection against chips and dirt getting in.
Variable adjustment of chucking capacity between 1-13 or 3-16 mm respectively.
With an extremely high moment of retention and clamping security irrespective of the direction of rotation.
Suitable both for either right-hand or left-hand rotation.
Balanced for maximum R.P.M. = 25 000

Application

For safe clamping of shanks in a chucking capacity of 1-13 resp. 3-16 mm, on CNC-routers with automatic tool-change. Can also be applied for simple routing operations, for instance grooving.

Spare parts / Accessories		Part-No.
Key with T-handle	SW 6	39140-0-00601-0

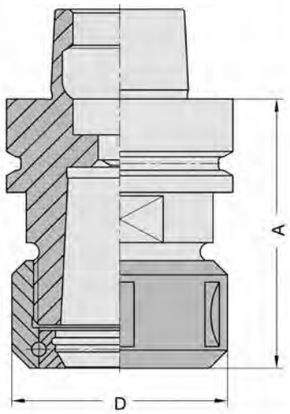

21038 according to DIN 69893, for OZ collets (2° 52´cone angle)

A mm	For collets No.	JSO No.	D mm	Part-No.
HSK-F 63				
78	OZ25 (up to 25 mm)	21048	60	21038-0-00753-R
118	OZ25 (up to 25 mm)	21048	60	21038-0-01153-R
HSK-F 63, Basic tool body with rust-resisting coating				
78	OZ25 (up to 25 mm)	21048	60	21038-0-00753-B
HSK-E 63				
78	OZ25 (up to 25 mm)	21048	60	21038-0-00755-R

21038 according to DIN 69893, for ER collets (8° cone angle)

A mm	For collets No.	JSO No.	D mm	Part-No.
HSK-F 63				
70	ER32 (up to 20 mm)	21053	50	21038-0-53703-R
75	ER40 (up to 30 mm)[1]	21054	63	21038-0-54753-R
95	ER40 (up to 30 mm)[1]	21054	63	21038-0-01950-R
HSK-E 63				
78	ER40 (up to 30 mm) [1]	21054	63	21038-0-00754-R

Technical details
High precision body, tempered, ground, thoroughly balanced. With hollow taper shank according to DIN 69893. The **ball bearing clamping nut** guarantees high clamping precision, protects the collet and the internal taper of the chuck and permits easy insertion and removal of the collet.

Application
For clamping of parallel shank tools on routers and CNC machines with automatic tool change.
Can be used for either **right-hand or left-hand rotation.**

The maximum and at the same time optimum length of shank respectively clamping length for the chucks No. 21038 is 55 mm (if necessary 60 mm). To ensure that the cutter is enclosed as far as possible by the collet and to keep the length as short as possible, it will be advisable to **remove the adjusting screw** most cutters have.

[1] for use of the collet ER 40 (No. 21054), **d= 30 mm**, in connection with e.g. JSO spiral router cutter No. 20290 (see page 4.11) on CNC machines, for special timber-frame constructions.

Spare parts / Accessories		Part-No.
Ball bearing clamping nut	M 40 x 1,5, D = 50 mm, ER32	39042-0-00040-R
Ball bearing clamping nut	M 48 x 2,0, D = 60 mm, OZ25	39042-0-00003-R
Ball bearing clamping nut	M 50 x 1,5, D = 63 mm, ER40	39042-0-00050-R
C-Spanner	45/50 for M 40 x 1,5	39158-0-45500-0
C-Spanner	58/62 for M 48 x 2,0 and M 50 x 1,5	39158-0-58622-0
Engineers' wrench	SW 36 (for HSK-F/-E 50)	39162-0-00036-0
Engineers' wrench	SW 46 (for HSK-F/-E 63)	39162-0-00046-0
Plug	D = 12 x 7 mm	39110-0-12070-0

For collets see pages 6.15, 6.16
For appropriate assembling device see pages 6.20 - 6.22
Supplied without C-Spanner and engineers`wrench. Both available as accessories.

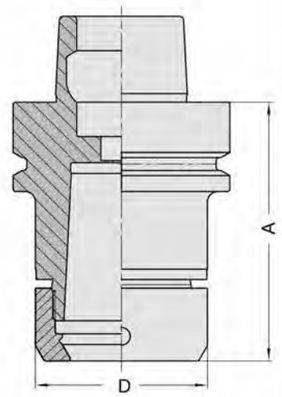

21017 High precision design

A mm	For collets No.	JSO Nr.	D mm	Part-No.
HSK-F 63				
75	OZ25 (up to 25 mm)	21049	50	21017-0-00063-F

Technical details
High precision workmanship, tempered, ground and thoroughly balanced. With patent high precision clamping nut.
With hollow taper shank HSK-F 63 according to DIN 69893.
Highest system accuracy ≤ 0,003 mm (when using JSO high precision collets No. 21049, see page 6.16).
Finely balanced up to 30 000 R.P.M.

Application
For high precision clamping of shank tools. Can be used for **right-hand or left-hand rotation.**

Spare parts / Accessories		Part-No.
Clamping nut	Preziso TP ø 40 x 1,5 mm	39017-0-00040-R
C-spanner*	Preziso 50 x 5 mm	39155-0-50000-0
Roller wrench insert	for torque-spanner insert, for max. tool-Ø 50 mm	39155-0-50000-2
Torque spanner	Preziso 40 - 200 Nm	39256-0-00200-0

* for tool-Ø > 50 mm, please use C-Spanner.
Supplied without C-spanner. Available as accessories.

Advantages:
- Highest concentricity and repeat accuracy ≤ 0,003 mm
- Optimum balancing quality
- Flexible use for different shank diameter
- Vibration-damping on e.g. hard workpiece material compare to heat shrinking chucks
- Insensitive to temperature fluctuations occured
- Maintenance free

THERMOTEC Heat Shrinking Chucks w. hollow taper shank (HSK)

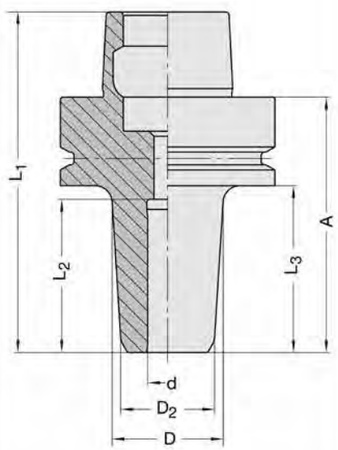

21022

d mm	D_2 mm	D mm	A mm	L_2/L_3 mm	$L_{e\,min}$ mm	L_1 mm	Part-No.
HSK-F 63							
6	23	27	75	23/49	27	100	21022-0-06063-F
8	23	27	75	38/49	27	100	21022-0-08063-F
10	28	32	75	40/49	32	100	21022-0-10063-F
12	27	33	75	45/49	37	100	21022-0-12063-F
14	29	34	75	46/49	37	100	21022-0-14063-F
16	30	36	75	50/49	38	100	21022-0-16063-F
20	34	39	75	55/49	42	100	21022-0-20063-F
25	37	43	75	55/49	47	100	21022-0-25063-F
30	44	51	75	57/50	56	100	21022-0-30063-F
HSK-E 63							
16	30	36	75	50/49	38	107	21022-0-16063-E
20	34	39	75	55/49	42	107	21022-0-20063-E
25	37	43	75	55/49	47	107	21022-0-25063-E

21022 PLUS

d mm	D_2 mm	D mm	A mm	L_2/L_3 mm	$L_{e\,min}$ mm	L_1 mm	Part-No.
HSK-F 63							
6	19	25	90	35/64	27	115	21022-0-06163-F
8	19	25	93	38/67	27	118	21022-0-08163-F
10	24	31	96	40/70	32	121	21022-0-10163-F
12	27	34	100	45/74	37	125	21022-0-12163-F
14	29	36	102	46/76	37	127	21022-0-14163-F
16	30	38	105	50/79	38	130	21022-0-16163-F
18	32	40	105	50/79	42	130	21022-0-18163-F
20	34	41	108	55/82	42	133	21022-0-20163-F
25	37	45	108	55/82	47	133	21022-0-25163-F
30	44	51	108	61/82	56	133	21022-0-30163-F
HSK-E 63							
16	30	38	105	50/79	38	137	21022-0-16163-E
20	34	41	108	55/82	42	140	21022-0-20163-E
25	37	45	108	55/82	47	140	21022-0-25163-E

$L_{e\,min}$ = Minimum clamping depth
Please note minimum clamping depth (mm) related to the clamping system.

Technical details
High precision tool holder with thermical tool clamping for shank tolerances according to Standard EN 847-2.
Precision balanced for maximum R.P.M. = 30 000.
Short, slim design - as Thermotec Plus / Extreme in slim, extended design: on demand.
3,3° conicity of the thermo cone.

Application
For high precision clamping of solid TC and steel shanks.
Especially suitable for HSC machining. Improved milling results thanks to precise run-out.
Suitable both for either right-hand or left-hand rotation.

Special advantages:
- Highest concentricity and repeat accuracy (< 0,003 mm)
- Optimum balancing quality
- Suitable for HSC-machining

Hydraulic Clamping Chucks with hollow taper shank (HSK)

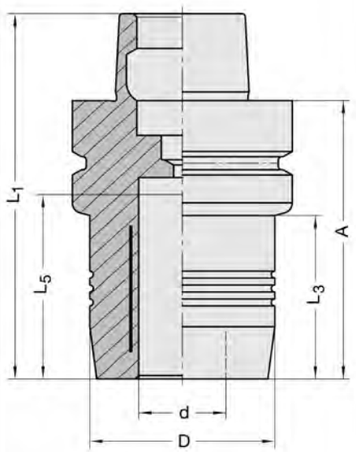

21016

d mm	D mm	A mm	L_5 mm	L_3 mm	L_1 mm	Part-No.
HSK-F 63						
10	30	80	31	34	105	21016-0-10063-0
12	32	80	36	34	105	21016-0-12063-0
16	38	80	39	34	105	21016-0-16063-0
20	52,5	80	41	54	105	21016-0-20063-0
25	52,5	90	47	64	115	21016-0-25063-0

Technical details
Tempered and ground tool body. Thoroughly balanced for R.P.M. max. 25 000.

Application
For high-precision clamping of parallel shanks.
For either right-hand or left-hand rotation.

Main Advantages
- Highest concentricity (< 0,003 mm)
- Optimum balancing quality
- Higher clamping precision
- Higher clamping power
- Vibration-damping

Spare parts / Accessories		Part-No.
Key with T-handle	SW 5	39140-0-00501-0

Supplied without key SW 5. Available as accessories.

Clamping Tools

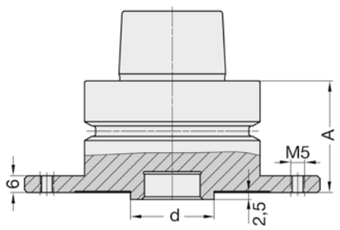

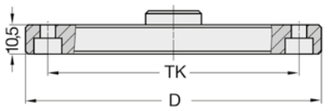

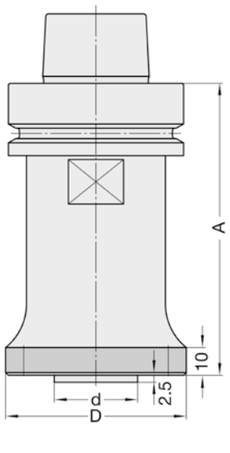

39498

D mm	d mm	A mm	TK mm	Design	Part-No.
HSK-F 63					
106	30	40	90	w. counter flange	39498-0-00001-0
106	30	40	90	without counter fl.	39498-0-00002-0
106	30	50	90	w. counter flange	39498-0-00003-0
106	30	50	90	without counter fl.	39498-0-00004-0

Technical details
Tempered saw blade clamping flange consisting of flange shank HSK-F 63 and 8 countersunk screws.
On request with counter flange and 8 socket head cap screws.

Application
For precise mounting of saw blades, for use on CNC machine-centres. Fixing directly on the clamping flange by using counter sunk screws (flush-mounted), or alternatively with counter flange and socket head cap screws.
For saw blade diameters up to D = 400 mm.

Spare parts / Accessories		Part-No.
Counter flange	with 8 socket head cap screws	39498-0-00021-0
Countersunk screw	M 5 x 9, T20	39085-0-05009-R
Locking screw	M 5 x 16 ISO 4762	39165-0-05016-R
Key with T-handle	SW 4 (for ISO 4762)	39140-0-00401-0
Torx key	T20, with handle	39077-0-00020-2

39498-0

D mm	d mm	A mm	TK_1 mm	TK_2 mm	Part-No.
HSK-F 63					
65	30	105	48	52	39498-0-06563-0

Technical details
Tempered saw blade clamping flange. Delivery with in total 8 countersunk screws on 2 different pitch circle diameters, 4 of each M 5 (pcd 52 mm) and M 6 (pcd 48 mm). For right-hand and left-hand rotation.

Application
For precise mounting of saw blades on CNC machine centres (e.g. pcd 52 mm, machine Homag), No. 81000/85000, page 4.58, or applicable for grooving saw blades, grooving cutters No. 40150/40160, page 4.59, No. 40180-9, page 5.29 and Lamello Clampex P (pcd 48 mm), No. 40190-9, page 5.29.
For saw blade diameters up to D= 260 mm.

Spare parts / Accessories		Part-No.
Countersunk screw	M 5 x 9 ISO 10642 (for TK_2)	39125-0-05012-R
Countersunk screw	M 6 x 12 ISO 10642 (for TK_1)	39125-0-06012-R
Allen key	SW 3 (for M5 ISO 10642)	39120-0-03000-0
Allen key	SW 4 (for M6 ISO 10642)	39120-0-04000-0

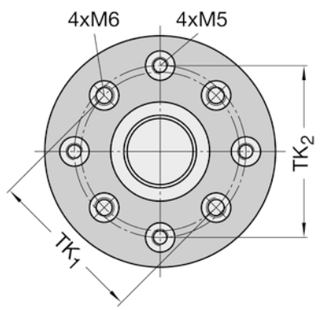

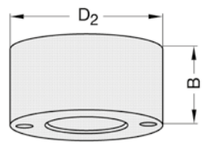

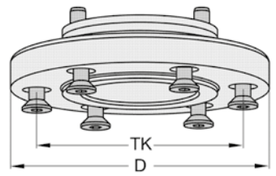

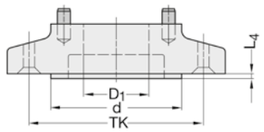

L_4 = 2,2 mm
d = 60 mm
TK = 80 mm

39495

D mm	B mm	D_1 mm	L_3 mm	D_2 mm	Part-No.
Adaptor 2-pc.-design					
100	30	30	55	-	39495-0-10000-4
100	45	30	70	-	39495-0-10001-4
100	70	30	95	-	39495-0-10002-4
Intermediate ring					
-	30	30	55	60	39541-0-30000-4
-	45	30	70	60	39541-0-45000-4
-	70	30	95	60	39541-0-70000-4
Flange (without ring)					
100	-	30	-	-	39495-0-10030-4

39495 assembled on arbor HSK-F 63

Shank	A mm	L_3 mm	B mm	D mm	Part-No.
Adaptor 3-pc.-design					
HSK-F 63	100	55	30	100	39495-0-03063-R
HSK-F 63	115	70	45	100	39495-0-04563-R
HSK-F 63	140	95	70	100	39495-0-07063-R

Technical details
2-piece saw blade flange, consisting of flange and intermediate ring, tempered and face-ground, with 6 countersunk screws M 6, pitch circle diameter 80 mm.
Applicable for all arbors d 30 x 40/55/80 mm ,No. 21086 (page 6.9) with drive holes.
Delivery complete with two straight pins 6 x 10 mm to provide positive drive which have to be assembled due to safety reasons.

3-piece design complete with appropriate arbor HSK-F 63 (note A-dimension).

Application
For mounting of saw blades up to D= 350 mm with 60 mm bore on standard arbors with shank HSK-F63 No. 21086, (page 6.9).

Spare parts / Accessories		Part-No.
Countersunk screw	M 6 x 9 ISO 10642	39125-0-06012-R
Key with T-handle	SW 5	39140-0-00501-0

Appropriate saw blades on page 4.58

Without further notice, we deliver L_3 = 55 mm (for A = 100 mm).
For different length, please choose appropriate arbor and intermediate ring as per table below.

L_2	B	L_3	A
40	30	55	100
55	45	70	115
80	70	95	140 (175)

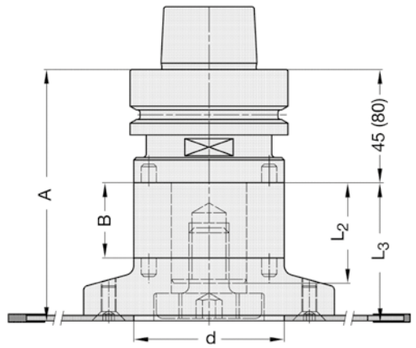

Clamping Tools

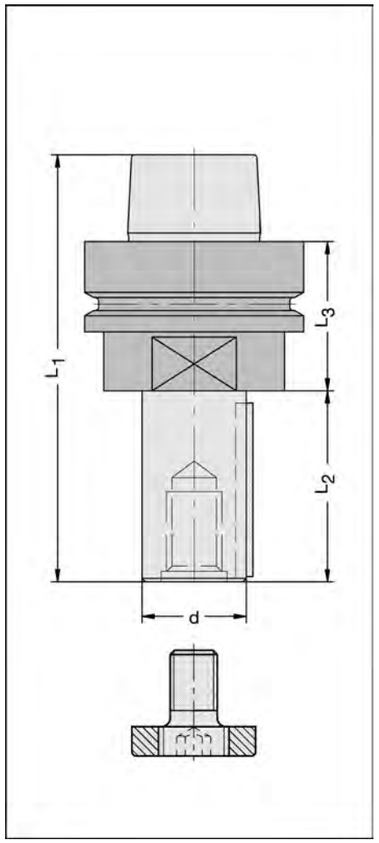

21086

d mm	L_2 mm	L_3 mm	KN/TK mm	L_1 mm	Part-No.
HSK-F 63 - with feather key					
20	40	45	6 x 1,5	110	21086-0-20413-1
20	55	45	6 x 1,5	125	21086-0-20513-1
20	55	80	6 x 1,5	160	21086-0-20553-1
20	70	45	6 x 1,5	140	21086-0-20713-1
20	70	80	6 x 1,5	175	21086-0-20703-1
30	40	45	8 x 2	110	21086-0-30413-1
30	55	45	8 x 2	125	21086-0-30553-1
30	80	45	8 x 2	150	21086-0-30813-1
30	80	80	8 x 2	185	21086-0-30803-1
30	163	52	8 x 2	240	21086-0-30163-1
30	189	52	8 x 2	266	21086-0-30189-1
HSK-F 63 - with 2 drive holes and 2 tapped holes					
30	40	45	48	110	21086-0-30413-2
30	55	45	48	125	21086-0-30553-2
30	80	45	48	150	21086-0-30813-2
30	80	80	48	185	21086-0-30823-2
30	120	45	48	190	21086-0-31203-2

Arbors HSK-F 63 modified available on request.
Without spacers. For spacer sets see page 7.27

Technical details
Tempered tool holder, thoroughly balanced. Higher clamping power and more security because of **double-threaded end retaining screw.** With feather key to provide positive drive. Optional on demand also with drive holes. Can be used either for right-hand or left-hand rotation.

Application
For mounting for single and multi-piece cutters with 20 or 30 mm bore on CNC machines. Adhere to weight and diameter specifications as well as to maximum spindle speed (R.P.M./max) laid down by the machine manufacturers.

Spare parts / Accessories		Part-No.
Retaining screw	M10 (for d = 20 mm)	39200-0-10000-R
Retaining screw	M16 (for d = 30 mm)	39200-0-16000-R
Retaining screw	M16, with collar (for d = 30 mm)	39200-0-42000-R
Driving pin	6 x 14 mm, hardened	39192-0-06014-0
Engineers' wrench	SW 36 (for HSK-F/-E 50)	39162-0-00036-0
Engineers' wrench	SW 46 (for HSK-F/-E 63)	39162-0-00046-0
Allen key	SW 6, hexagon (for M10)	39120-0-06000-0
Allen key	SW 10, hexagon (for M16)	39120-0-10000-0

Supplied without engineers' wrench and allen key. Available as accessories on demand.

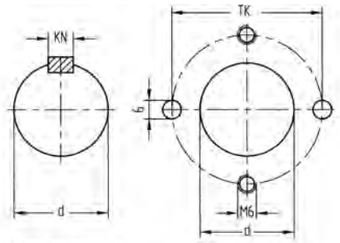

Standard design with feather key

Design with 2 drive holes and 2 tapped holes

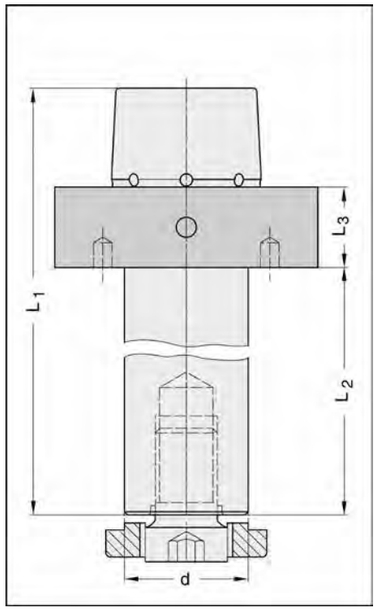

21090

d mm	L_2 mm	L_3 mm	TK mm	L_1 mm	Part-No.
HSK 85 W					
40	40	26	54	98	21090-0-40040-2
40	80	26	54	138	21090-0-40080-2
40	130	26	54	188	21090-0-40130-2

Technical details
Tempered tool holder, well-balanced. Higher clamping force and more security because of **double-threaded end retaining screw.** With 2 drive holes and 2 tapped holes.

Application
For use with planing or profile cutters with bore on WEINIG moulders.

Spare parts / Accessories		Part-No.
Retaining screw	M16 (for d = 30 mm), with centering collar	39200-0-30000-R
Retaining screw	M20 (for d = 40 mm), with centering collar	39200-0-40000-R
Driving pin	6 x 14 mm, hardened	39192-0-06014-0
Allen key	SW 10, hexagon (for M16)	39120-0-10000-0
Allen key	SW 12, hexagon (for M20)	39120-0-12000-0

Supplied without allen key. Available as accessories on demand.
For appropriate assembling device (d= 85 mm) see page 6.21

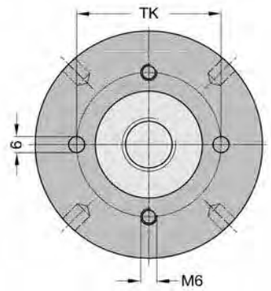

Clamping Tools

Collet Chucks with steep taper shanks

SK 30

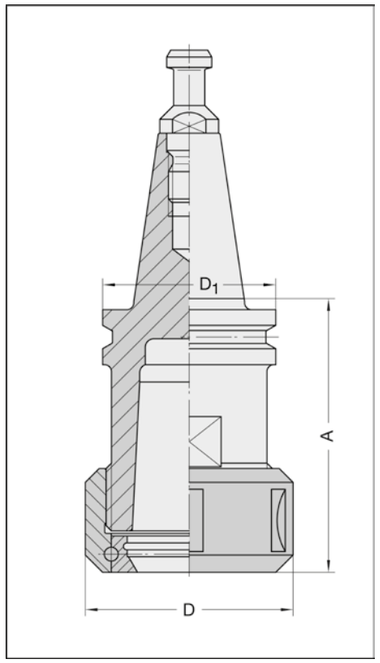

21042 according to DIN 69871

AB* No.	A mm	D mm	D_1 mm	For collets No.	JSO Nr.	Part-No.
SK 30, for IMA, Maka, Reichenbacher, Stegherr, Weeke, Busellato, Bulleri etc.						
1	50	50	50	ER32	21053 (up to 20 mm)	21042-0-00502-R
1	57	63	50	ER40	21054 (up to 25 mm)	21042-0-00572-R
1	73	60	50	OZ25	21048 (up to 25 mm)	21042-0-00702-R
SK 30, for Biesse up from 9/92 model, Masterwood (HSD-motors)						
4	50	50	50	ER32	21053 (up to 20 mm)	21042-0-40502-R
4	57	63	50	ER40	21054 (up to 25 mm)	21042-0-40572-R
4	73	60	50	OZ25	21048 (up to 25 mm)	21042-0-40702-R

[1] AB = pull stud

Technical details
High-precision body, tempered, ground and thoroughly balanced. The pull stud will be adapted to each type of machine. The **ball bearing clamping nut** guarantees high clamping precision, protects the collet and the internal taper of the chuck and permits easy insertion and removal of the collet.
Can be used either **for right-hand or left-hand rotation**.

Application
For clamping of parallel shank tools on CNC machines with automatic tool change.

Spare parts / Accessories		Part-No.
Ball bearing clamping nut	M 40 x 1,5, D = 50 mm, ER32	39042-0-00040-R
Ball bearing clamping nut	M 48 x 2, D = 60 mm, OZ25	39042-0-00003-R
Ball bearing clamping nut	M 50 x 1,5, D = 63 mm, ER40	39042-0-00050-R
C-Spanner	45/50 for M 40 x 1,5	39158-0-45500-0
C-Spanner	58/62 for M 48 x 2,0 and M 50 x 1,5	39158-0-58622-0
Engineers' wrench	SW 41 for SK 30 (except A=50 mm)	39162-0-00041-0
Engineers' wrench	SW 46 for SK 40 (also SK 30 A=50 mm)	39162-0-00046-0

Supplied without collet, C-Spanner and engineers`wrench. Optional on demand.

For collets see pages 6.15, 6.16
For assembling devices see pages 6.20, 6.21
Pull studs see page 6.23

Spindle Taper Wipers

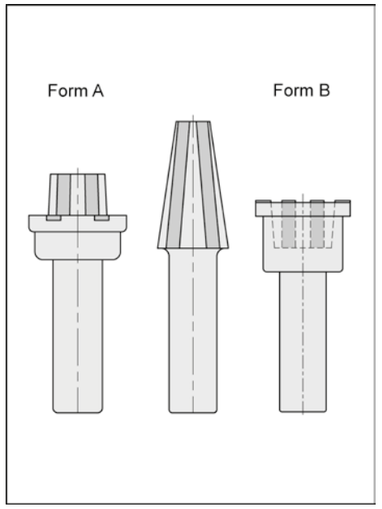

21190

Shank	Form	Part-No.
for inside cone		
HSK-F 63	A	21190-0-00063-0
HSK-E 63	A	21190-0-00163-0
SK 30	A	21190-0-00002-0
HSK 85 W	A	21190-0-00263-0
for outside cone		
HSK-F 63	B	21190-0-01063-0

Technical details
HSK-F 63 (for inside and outside cone) of rigrid PVC, SK 30 made of hardwood, coated with natural leather.

Application
Wiping of the plan surface and taper surface of HSK-F 63 in a single pass.
Regular cleaning of the tool mounting ensures true concentricity and maximum power transmission.

Collet Chuck

parallel shank

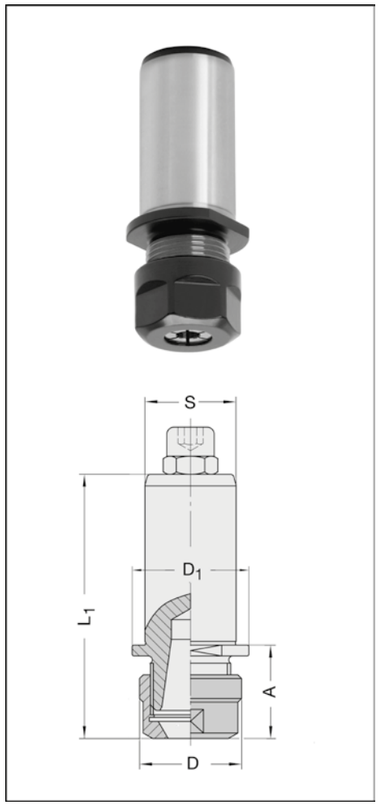

21044

D mm	D_1 mm	L_1 mm	A mm	For collets No.	JSO No.	Part-No.
Parallel shank 25 x 55 mm						
28	32	75	28,5	ER16	21057 (up to 10 mm)	21044-0-00010-R

Technical details
High-precision body, tempered, ground and precision balanced. For use with precision collets No. 21057 (ER16).

Application
Especially for use on Weeke-BHX machines with hydro clamping system. For flexible and quick clamping of tools with shank diameter Ø 6 -10 mm.

Spare parts / Accessories		Part-No.
Collet ER16	d = 6 mm, L = 27 mm, D= 17 mm	21057-0-06000-0
Collet ER16	d = 8 mm, L = 27 mm, D= 17 mm	21057-0-08000-0
Collet ER16	d = 10 mm, L = 27 mm, D= 17 mm	21057-0-10000-0
Clamping nut BHX	M 22 x 1,5, D = 28 mm	39041-0-22000-R
Adjusting screw	M 8, with lock nut	39264-0-08025-R
C-Spanner	SW 25 (for clamping nut)	39162-0-00025-0
Engineers' wrench	SW 27 (for collet chuck)	39162-0-00027-0

Collets No. 21057 see page 6.17
Supplied without engineers`wrench and C-spanner. Both available as accessories.

Collet Chuck

parallel shank

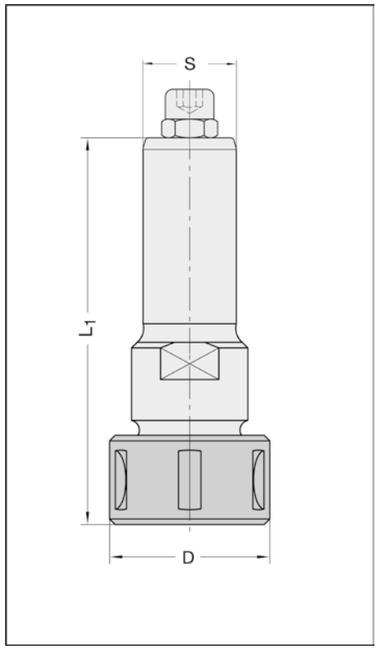

21044

D mm	L_1 mm	For collets No.	JSO Nr.	Part-No.
Parallel shank 25 x 55 mm				
43	103	OZ16	21046 (up to 16 mm)	21044-0-00002-R

Technical details
High-precision body, tempered, ground and thoroughly balanced.
The **ball bearing clamping nut** guarantees high clamping precision, protects the collet and the internal taper of the chuck and permits easy insertion and removal of the collets.

Application
For clamping of parallel shank tools on routers and CNC machines.
To be used either for **right-hand or left-hand rotation.**

Spare parts / Accessories		Part-No.
Ball bearing clamping nut	M 30 x 1,5, D = 43 mm, R.H. rotation	39042-0-00002-R
Adjusting screw	M 8, with lock nut	39264-0-08025-R
C-Spanner	40/42 for M 30 x 1,5	39158-0-40421-0
Engineers' wrench	SW 27	39162-0-00027-0

For collets No. 21046 see page 6.15
Supplied without engineers`wrench and C-spanner. Both available as accessories.

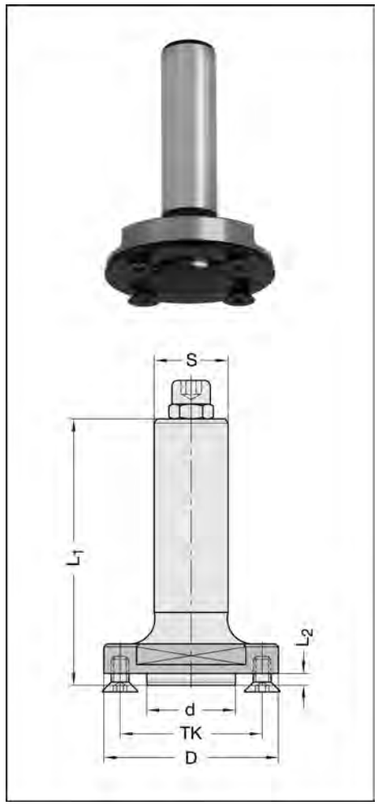

21079

d mm	D mm	L_2 mm	L_1 mm	TK mm	Shank mm	Part-No.
22	50	4	90	36	16 x 65 m. E.	21079-0-22043-2
22	50	4	90	36	25 x 65 m. E.	21079-0-22046-2
30	60	4	90	48	16 x 65 m. E	21079-0-30043-2
30	60	4	90	48	3/4" x 65 m. E.	21079-0-30044-2
30	60	4	90	48	20 x 65 m. E.	21079-0-30045-2
30	60	4	90	48	25 x 65 m. E.	21079-0-30046-2

Technical details
High precision body, tempered and ground. Supplied with 4 countersunk screws.

Design with d = 22 mm:
applicable for Lamello grooving cutters No. 40145 or No. 60255, page 4.22 and pcd grooving cutter No. 40190-9 ("Clamex"), page 5.29.

Design with d= 30 mm:
applicable e.g. for sawblades No. 81000/85000, page 4.58, grooving saw blades 40150/40160, page 4.59, No. 40180-9, page 5.29 or grooving cutters No. 60250/60255, page 4.22.

Application
For direct mounting of saw blades, grooving cutters with 2 - 10 mm thick bodies respectively hubs.
Having bodies or hubs of a thickness up to 3,5 mm the ring (included when ordering the arbor) has to be mounted between tool and collar.
Especially applicable together with grooving cutters for Lamello Clamex on CNC centers machines.

Spare parts / Accessories		Part-No.
Countersunk screw	M 6 x 12 ISO 10642	39125-0-06016-R
Adjusting screw	M 6, with lock nut	39264-0-06025-R
Adjusting screw	M 8, with lock nut	39264-0-08025-R
Ring	60 x 2,0 x 30 mm, with countersunk holes	39541-0-02000-3
Ring	50 x 2,0 x 22 mm, with countersunk holes	39541-0-02022-3
Engineers' wrench	SW 46	39162-0-00046-0
Allen key	SW 5	39120-0-05000-0
Key with T-handle	SW 5	39140-0-00501-0

Supplied without engineers´ wrench. Available as accessories on demand.

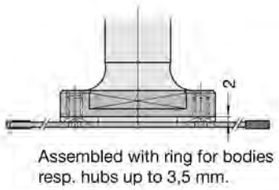

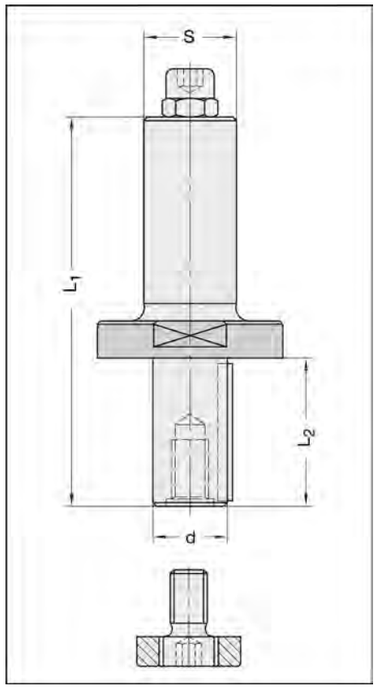

21080

d mm	L_2 mm	L_1 mm	KN/TK mm	Shank mm	Part-No.
20	40	105	6 x 1,5	25 x 55 m. E.	21080-0-20406-1
30	40	105	8 x 2	25 x 55 m. E.	21080-0-30406-1

Technical details
Tempered tool holder, thoroughly balanced, meeting high requirements regarding tool life.
Higher clamping force and more security because of **double-threaded end retaining screw.**
With feather key to provide positive drive. Can be used either for right-hand or left-hand rotation.
Supplied without spacers. For spacer sets No. 39548 see page 7.27.

Application
For mounting of single and multi-piece cutters with 20 or 30 mm bore, on stationary routers or CNC machines.

Spare parts / Accessories		Part-No.
Retaining screw	M10 (for d = 20 mm)	39200-0-10000-R
Retaining screw	M16 (for d = 30 mm)	39200-0-16000-R
Retaining screw	M16, with collar (for d = 30 mm)	39200-0-42000-R
Adjusting screw	M 8, with lock nut	39264-0-08025-R
Engineers' wrench	SW 46	39162-0-00046-0
Allen key	SW 5, hexagon (for M 8)	39120-0-05000-0
Allen key	SW 6, hexagon (for M10)	39120-0-06000-0
Allen key	SW 10, hexagon (for M16)	39120-0-10000-0

Supplied without engineers`wrench and allen key. Available as accessories on demand.

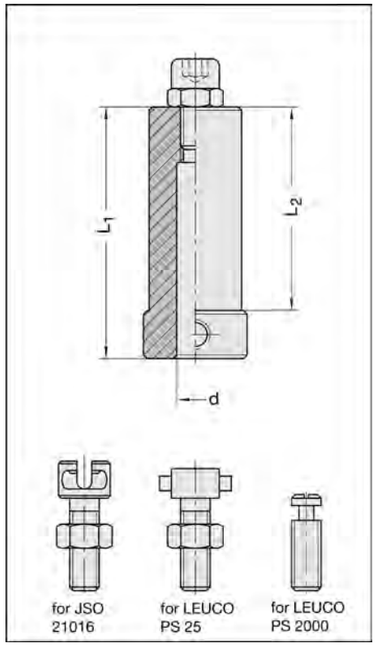

39048

d mm	L_2 mm	L_1 mm	Shank mm	Part-No.
10	55	68	25 x 55 m. E. M 8	39048-0-25100-2
12	55	68	25 x 55 m. E. M 8	39048-0-25120-2

Technical details
High precision body, tempered and ground. For cylindrical shank up to 12 mm.
With M 8 adjusting screw when used in collet chucks or optional on demand with setting and security screw for JSO No. 21016, LEUCO PS 25 or PS 2000.

Application
Designed as a reducing adaptor between shank holders or collets of 25 mm and smaller diameter tool shanks.

Spare parts / Accessories		Part-No.
Adjusting screw	M 8, with lock nut	39264-0-08025-R
Setting screw	M 8, for JSO No. 21016	39190-0-08001-R
Setting screw	M 8, for LEUCO PS 25	39190-0-08010-R
Adjusting screw	M 8, for LEUCO PS 2000	39190-0-08020-R
Allen screw	M 8 x 8, ISO 4028	39266-0-08008-R

Clamping Tools

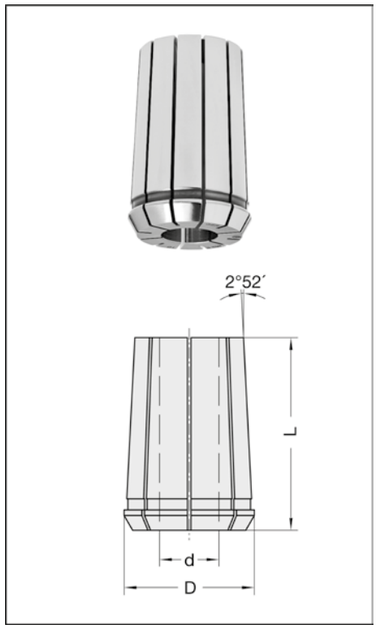

21046 DIN/ISO 10897 Form B - class 2

d mm	L mm	D mm	clamping tolerance mm	Part-No.
(415 E) OZ16				
6	40	25,5	6 - 5,5	21046-0-06000-0
6,5	40	25,5	6,5 - 6	21046-0-06500-0
8	40	25,5	8 - 7,5	21046-0-08000-0
10	40	25,5	10 - 9,5	21046-0-10000-0
12	40	25,5	12 - 11,5	21046-0-12000-0
13	40	25,5	13 - 12,5	21046-0-13000-0
14	40	25,5	14 - 13,5	21046-0-14000-0
16	40	25,5	16 - 15,5	21046-0-16000-0

21048 DIN/ISO 10897 Form B - class 2

d mm	L mm	D mm	clamping tolerance mm	Part-No.
(462 E) OZ25				
3	52	35,05	3 - 2,5	21048-0-03000-0
4	52	35,05	4 - 3,5	21048-0-04000-0
5	52	35,05	5 - 4,5	21048-0-05000-0
6	52	35,05	6 - 5,5	21048-0-06000-0
6,5	52	35,05	6,5 - 6	21048-0-06500-0
8	52	35,05	8 - 7,5	21048-0-08000-0
9,5	52	35,05	9,5 - 9	21048-0-09500-0
10	52	35,05	10 - 9,5	21048-0-10000-0
12	52	35,05	12 - 11,5	21048-0-12000-0
13	52	35,05	13 - 12,5	21048-0-13000-0
14	52	35,05	14 - 13,5	21048-0-14000-0
16	52	35,05	16 - 15,5	21048-0-16000-0
18	52	35,05	18 - 17,5	21048-0-18000-0
20	52	35,05	20 - 19,5	21048-0-20000-0
25	52	35,05	25 - 24,5	21048-0-25000-0
Inch sizes				
¼" (6,35 mm)	52	35,05	6,35 - 5,85	21048-0-06350-0
⅜" (9,52 mm)	52	35,05	9,52 - 9,02	21048-0-09520-0
½" (12,70 mm)	52	35,05	12,70 - 12,20	21048-0-12700-0

Technical details
Tempered and ground precision design. 10-12 times double-sided slotted.

Precision Collets closure range 0,5 mm

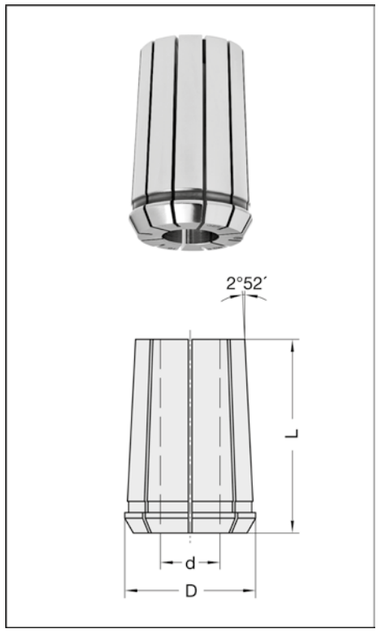

21049 High-precision design DIN/ISO 10897 Form B - class 1

d mm	L mm	D mm	clamping tolerance mm	Part-No.
(462 HP) OZ25				
3	52	35,05	3 - 2,5	21049-0-03000-0
4	52	35,05	4 - 3,5	21049-0-04000-0
6	52	35,05	6 - 5,5	21049-0-06000-0
8	52	35,05	8 - 7,5	21049-0-08000-0
10	52	35,05	10 - 9,5	21049-0-10000-0
12	52	35,05	12 - 11,5	21049-0-12000-0
14	52	35,05	14 - 13,5	21049-0-14000-0
16	52	35,05	16 - 15,5	21049-0-16000-0
18	52	35,05	18 - 17,5	21049-0-18000-0
20	52	35,05	20 - 19,5	21049-0-20000-0
25	52	35,05	25 - 24,5	21049-0-25000-0
Inch sizes (462 HP) OZ25				
¼" (6,35 mm)	52	35,05	6,35 - 5,85	21049-0-06350-0
⅜" (9,52 mm)	52	35,05	9,52 - 9,02	21049-0-09520-0
½" (12,70 mm)	52	35,05	12,70 - 12,20	21049-0-12700-0
¾" (19,05 mm)	52	35,05	19,05 - 18,55	21049-0-19050-0

Technical details
Tempered and ground high-precision design. 10-12 times double-sided slotted.
Class 1: precision 0,002 mm

Precision Collets closure range 1,0 mm

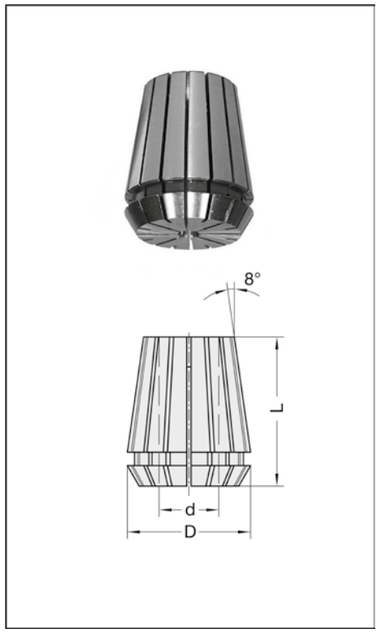

21053 / 21054 DIN/ISO 15488 short design Form B - class 2

d mm	L mm	D mm	clamping tolerance mm	Part-No.
(470 E) ER 32				
6	40	33	6 - 5	21053-0-06000-0
8	40	33	8 - 7	21053-0-08000-0
10	40	33	10 - 9 (e.g. 9,52)	21053-0-10000-0
12	40	33	12 - 11	21053-0-12000-0
14	40	33	14 - 13	21053-0-14000-0
16	40	33	16 - 15 (e.g. 15,88)	21053-0-16000-0
20	40	33	20 - 19 (e.g. 19,05)	21053-0-20000-0
(472 E) ER 40				
6	46	41	6 - 5	21054-0-06000-0
7	46	41	7 - 6 (e.g. 6,35)	21054-0-07000-0
8	46	41	8 - 7	21054-0-08000-0
10	46	41	10 - 9 (e.g. 9,52)	21054-0-10000-0
12	46	41	12 - 11	21054-0-12000-0
13	46	41	13 - 12 (e.g. 12,7)	21054-0-13000-
14	46	41	14 - 13	21054-0-14000-0
16	46	41	16 - 15 (e.g. 15,88)	21054-0-16000-
18	46	41	18 - 17	21054-0-18000-0
20	46	41	20 - 19 (e.g. 19,05)	21054-0-20000-
25	46	41	25 - 24	21054-0-25000-0
30	46	41	30 - 29	21054-0-30000-0

Technical details
Tempered and ground precision design, 16-times double-sided slottet.

Precision Collets

closure range 1,0 mm

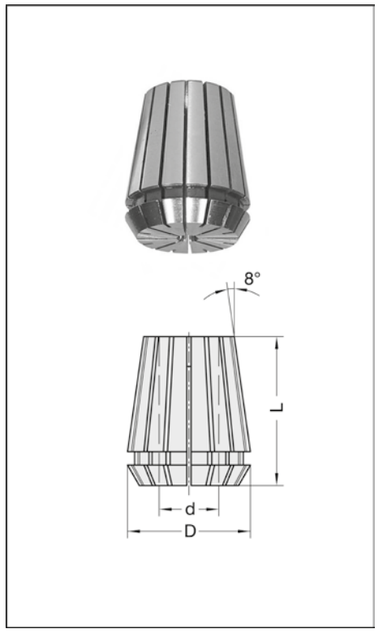

21055 - 21057 DIN/ISO 15488 short design Form B - class 2

d mm	L mm	D mm	clamping tolerance mm	Part-No.
(426 E) ER 16				
6	27	17	6 - 5	21057-0-06000-0
8	27	17	8 - 7	21057-0-08000-0
10	27	17	10 - 9	21057-0-10000-0
(428 E) ER 20				
6	31	21	6 - 5	21056-0-06000-0
8	31	21	8 - 7	21056-0-08000-0
10	31	21	10 - 9	21056-0-10000-0
12	31	21	12 - 11	21056-0-12000-0
(430 E) ER 25				
6	34	26	6 - 5	21055-0-06000-0
8	34	26	8 - 7	21055-0-08000-0
10	34	26	10 - 9 (e.g. 9,52)	21055-0-10000-0
12	34	26	12 - 11	21055-0-12000-0
14	34	26	14 - 13	21055-0-14000-0
16	34	26	16 - 15 (e.g. 15,88)	21055-0-16000-0

Technical details
Tempered and ground precision design, 16-times double sided slottet.

Precision Collet Sets

21048 - 21054 Set

L_2 mm	D_1 mm	Design	Part-No.
Closure range 0,5 mm			
52	35,05	21048 (462 E) OZ25	21048-0-00001-0
52	35,05	21049 (462 HP) OZ25	21049-0-00001-0
Closure range 1,0 mm			
40	32,8	21053 (470 E) ER 32	21053-0-00001-0
46	40,8	21054 (472 E) ER 40	21054-0-00001-0

Standard set, consisting of:
No. 21053: 1 pc./each d = 6, 8, 10, 12, 16, 18 and 2 pcs. 20 mm
No. 21048, 21049 and 21054: 1 pc./each d = 6, 8, 10, 12, 16, 18, 20, 25 mm

Technical details
Collet set, consisting of 8 pieces.
Individual sets can be assembled according to personal needs from our collet programme pages 6.15, 6.16.

PREZISO Turbine

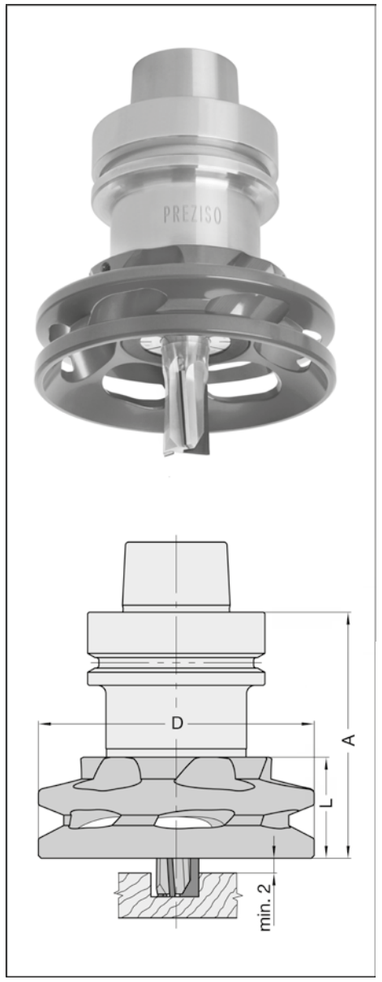

Important notes:
Only dust and chips can be extracted (particle size < 4 cm **must** be cut).

39499 PREZISO

D mm	L mm	A mm	For collets No.	Part-No.
98	36,5	88	462 E/HP (21049)	39499-0-10017-R

Technical details
High quality, light-weight aluminium for less spindle load. With ceramic, blue colored, antistatic surface coating for wear resistance and corrosion protection. Complete with integrated PREZISO clamping nut.

Application
Simply screwing onto the existing PREZISO collet chuck (instead of clamping nut) using the existing high precission collets 462E/HP. For use in nesting, contouring and profiling. Right-hand rotation. For mechanical feed.

For tool assembling, the optional torque wrench complete with suitable spaner insert and the PREZISO assembling device No. 21172 (page 6.21) is recommended.

Collet chucks No. 21017 (page 6.3) and collets No. 21049 (page 6.16) optional on demand.

Advantages:
- Drastic reduced dust and chip emission
- Improved tool life
- Particularly low noise level
- Easy use, assembling and removal

Spare parts / Accessories		Part-No.
Torque spanner	Preziso 40 - 200 Nm	39256-0-00200-0
Roller wrench insert	for torque-spanner, for chuck-Ø 63 mm	39155-0-63000-2

Torque recommendations for PREZISO turbine

Nm	for tool Ø
80	2 - 6
110 - 120	7 - 15
130 - 140	16 - 25

Application recommendation

R.P.M.	Nesting	Routing
	Feed rate v_f (m/min)	
18 000	approx. 14	approx. 10
20 000	approx. 16	approx. 12
22 000	approx. 18	approx. 14
24 000	approx. 20	approx. 16

Clamping Tools

Dust and Chip Extraction Turbine

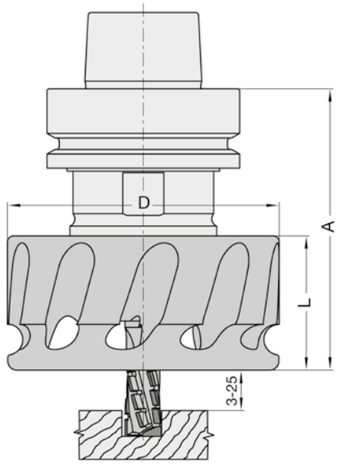

39499

D mm	L mm	A mm	for collet no.	JSO No.	in place of nut	Part-No.
for collet chuck 21038-0-53703-R						
100	44	91	ER32	21053	M 40 x 1,5	39499-0-10032-R
for collet chucks 21038-0-00753-R, -00755-R*, -01750-R						
100	44	94 (*97)	OZ25	21048	M 48 x 2	39499-0-10025-R
for collet chuck 21038-0-54753-R						
100	44	94	ER40	21054	M 50 x 1,5	39499-0-10040-R

Supplied complete with C-spanner.

Technical details
High-quality, light-weight aluminium reduces the load on the spindle.
With ceramic, antistatic surface coating for wear resistance and corrosion protection.
With either M 40 x 1,5, M 48 x 2 or M 50 x 1,5 interface.

Application
Simply screw onto the existing collet chuck (instead of the clamping nut), using the existing collets OZ25, 462E, ER32 or ER40. For use in nesting, contouring and profiling.
Right-hand rotation. For mechanical feed.

Collet chucks No., 21038 (page 6.2), No. 21042 (page 6.11) and collets (pages 6.15, 6.16) on demand.

Advantages:
- Drastic reduction in dust and chips
- Improved tool life
- Low noise level
- Easy use, assembling and removal

Spare parts / Accessories		Part-No.
Torque spanner	without spanner insert, for 40 - 200 Nm	39256-0-00200-0
Spanner insert	for torque wrench, C-shaped, for D= 100 mm	39156-0-00100-0
C-spanner	95/100 for D= 100 mm	39157-0-10000-0

Torque for turbine

Part-No.	for collets	torque	for tools < Ø 8 mm
39499-0-10032-R	ER 32	110 Nm	90 Nm
39499-0-10025-R	444E / 462E / OZ25	150 Nm	120 Nm
39499-0-10040-R	ER 40	150 Nm	120 Nm

PREZISO Innovation package

21017-0 7-pieces

D mm	Shank	Description	Part-No.
98	HSK-F 63	complete	21017-0-00001-0

Technical details
Multi-piece "starter-kit" consisting of:
- Preziso turbine
- Preziso collet chuck
- high precision collet (for shank diameter at the choice - please order specially in addition)
- roller wrench insert

conveniencly packed in the Preziso system box.
Preziso torque wrench and the appropriate Preziso assembling device is also included.

Application
For use in nesting, contouring and profiling of panel materials, e.g. chipboard raw and laminated, MDF, OSB, HPL, plastics and foam on CNC machines. Right-hand rotation. For mechanical feed.

Advantages:
- Reducing of dust and chip emission up to 98 %
- Especially reduced noise emission during use
- Protection of the machine spindle. Finely balanced to G 2,5 on 24 000 R.P.M.
- Cooling of the tool through resulting air flow

Assembling device

for clamping chucks and arbors

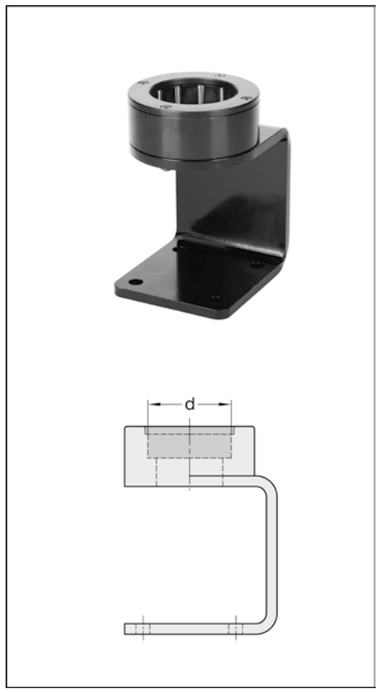

21162 Roller bearing clamping system

d mm	Design	Part-No.
63	HSK-F 63/HSK-E 63	21162-0-00063-0

Technical details
Single piece design with roller bearing clamping system. Base with fixing holes for assembling on the worktable.

Application
For assembling, disassembling and setting in chucks or on arbors with 63 mm collar dimension.

Clamping Tools

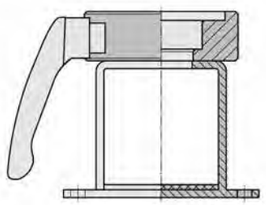

21172 New design

d mm	Design	Part-No.
40	HSK-E 40	21172-0-00101-0
50	SK 30/HSK-F 50 /HSK-E 50/HSK-E 40	21172-0-00102-0
63,5	SK 40/BT 40	21172-0-00103-0
49	SK 30 w. serrated collar (SCM/Morbidelli)	21172-0-00104-0
46	ISO 30 (CMS)/BT 30	21172-0-00105-0
63	HSK-F 63/HSK-E 63	21172-0-00106-0
85	HSK 85 W (Weinig)	21172-0-00108-0
98/63	Preziso turbine/HSK-F 63	21172-0-00109-0

Technical details
Two-piece clamping jaws of high-quality light alloy, mounted on a sturdy base in open U-Form.
The quick-lock clamping lever ensures easy and absolutely safe clamping of clamping chucks, arbors or the PREZISO-turbine. Very easy and effortless to operate. The same base fits for all clamping jaws.

Application
For safe assembling and setting of shank-type tools or tool sets in chucks or on arbors.

Thanks to the open design particularly suitable for "over-head assembling". Integrated damping pad in the base.
Especially recommended for assembling of the JSO PREZISO turbine.

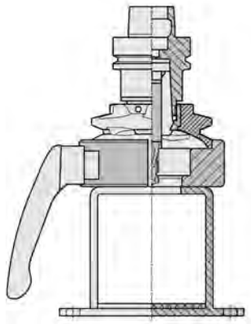

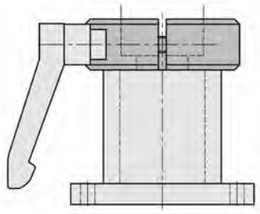

21172

d mm	Design	Part-No.
40	HSK-E 40	21172-0-00001-0
50	SK 30 /HSK-F 50 /HSK-E 50 / HSK-E 40 Mod.	21172-0-00002-0
63,5	SK 40/BT 40	21172-0-00003-0
49	SK 30 w. serrated collar (SCM/Morbidelli)	21172-0-00004-0
46	ISO 30 (CMS)/BT 30	21172-0-00005-0
63	HSK-F 63/HSK-E 63	21172-0-00006-0
85	HSK 85 W (Weinig)	21172-0-00008-0
98/63	Preziso turbine/HSK-F 63	21172-0-00009-0

Technical details
Two-piece clamping jaws of high-quality light alloy, mounted on a sturdy base.
The quick-lock clamping lever ensures easy and absolutely safe clamping of clamping chucks and arbors. Very easy and effortless to operate. The same base fits for all clamping jaws.

Application
For safe assembling and setting of shank-type tools or tool sets in chucks or on arbors with the above specified shank types.

Suitable for all makes and designs of chucks and arbors with the above specified shanks.

Appropriate measuring system for length- and diameter measuring on page 6.23.

For clamping of complete drilling and routing units of varied types of CNC machines it is possible to provide additional bores or recesses to take the speed-torque supports (optional on demand against extra costs).

When placing an order please enclose either a sketch, a drawing or a complete unit.

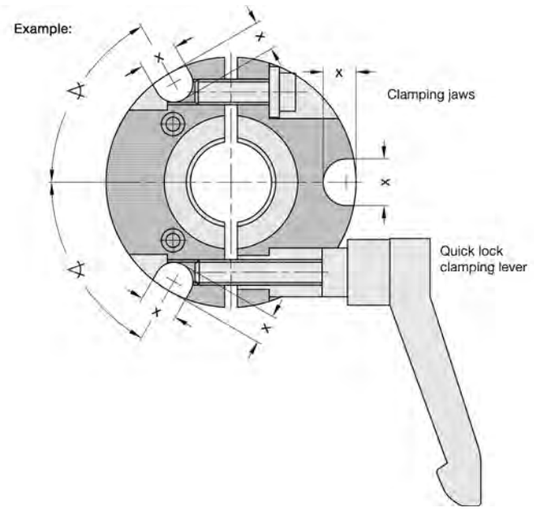

DIGITEC-Measuring System

to suit assembling device No. 21172

21175 GBM

Type	D_{max} mm	$A_{max.}$ mm	Part-No.
With assembling device No. 21172			
LM 135	135	270	21175-0-13500-M
LM 205	205	270	21175-0-20500-M
LDM 205*	100	270	21175-0-00000-M
Without assembling device No. 21172			
L 135	135	270	21175-0-13500-0
L 205	205	270	21175-0-20500-0
D 205*	100	270	21175-0-10500-0

* incl. calibration arbor LD
L = Length measuring, D = Diameter measuring, M = Assembling device

Technical details

With clamping profile for mounting on the assembling device No. 21172. Precise measuring lineal with digital measuring ruler.

Application

The length dimension A (see ill.) of a single or multi-part tool with shank HSK-F 63 or E 63 can be measured quickly and precisely, using the assembling device No. 21172.
Thanks to the integrated swivelling device, especially convenient reference measuring.
For mounting on assembling device No. 21172.
For assembling devices supplied before August 2008, it is necessary to exchange the clamping jaws (for a small extra charge).
The diameter measuring device D 205 can subsequently be mounted quickly and easily on the measuring bar (only on L/LM205) - see ill. LDM 205.
For reference measuring (= tool centre) in connection with diameter measuring, the calibration arbor must be used (see ill.). Also for steep taper shank SK30 available.
For length measuring of shank HSK-E/F 50, a ring (optional accessory) D= 35 mm is necessary.

Spare parts / Accessories		Part-No.
Calibration arbor LD	63 x 100 mm	21110-0-63100-0
Calibration arbor L	65/63 x 100 mm	21110-0-63200-0
Measuring ruler bridge	129 x 8 x 7 mm	21175-0-34102-1
Ring	D = 35 x 10 mm	21175-0-03010-0

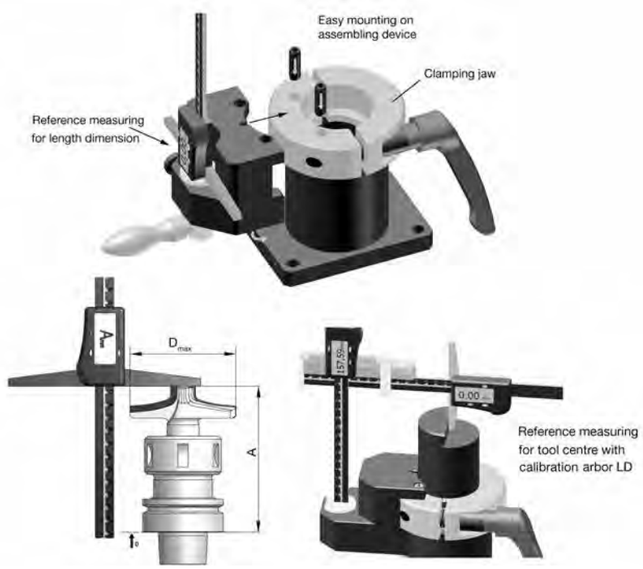

Pull Studs, Spare parts

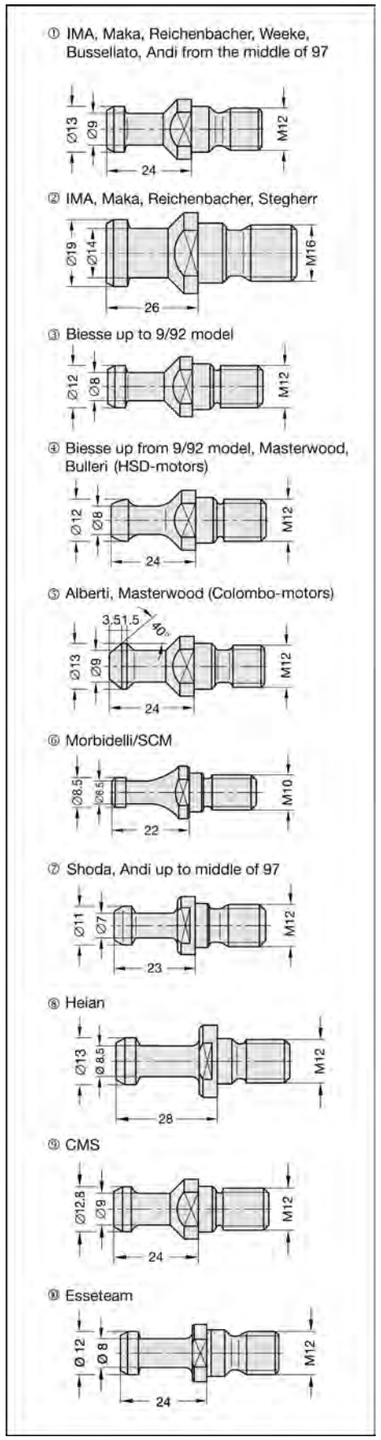

39191 Pull studs

Dimension	Machine	Part-No.
No. 1: 13/9 - M12	IMA, Maka, Reichenbacher, Weeke, Busellato etc.	39191-0-00013-0
No. 2: 19/14 - M16	IMA, Maka, Reichenbacher, Stegherr, etc.	39191-0-00019-0
No. 3: 12/8 - M12	Biesse up to 9/92	39191-0-00120-0
No. 4: 12/8 - M12	Biesse up from 9/92, Masterwood etc. (HSD-motors)	39191-0-00121-0
No. 5: 13/9 - M12	Alberti, Masterwood (Colombo-motors)	39191-0-00131-0
No. 6: 8,5/6,5 - M10	Morbidelli, SCM	39191-0-00085-0
No. 7: 11/7 - M12	Shoda	39191-0-00110-0
No. 8: 13/8,5 - M12	Heian	39191-0-00132-0
No. 9: 12,8/9 - M12	CMS	39191-0-00128-0
No. 10: 12/8 - M12	Esseteam	39191-0-00122-0

39042 Clamping nuts

Description	Dimension		Part-No.
Ball bearing clamping nut	M 30 x 1,5, D = 43 mm	OZ16	39042-0-00002-R
Ball bearing clamping nut	M 40 x 1,5, D = 50 mm	ER32	39042-0-00040-R
Ball bearing clamping nut	M 48 x 2,0, D = 60 mm	OZ25	39042-0-00003-R
Ball bearing clamping nut	M 50 x 1,5, D = 63 mm	ER40	39042-0-00050-R

Spare parts / Accessories		Part-No.
C-Spanner	40/42 for M 30 x 1,5	39158-0-40421-0
C-Spanner	45/50 for M 40 x 1,5	39158-0-45500-0
C-Spanner	58/62 for M 48 x 2 and M 50 x 1,5	39158-0-58622-0
Engineers' wrench	SW 41 for SK 30 (except A=50 mm)	39162-0-00041-0
Engineers' wrench	SW 46 for SK 40 (also SK 30 A=50 mm)	39162-0-00046-0

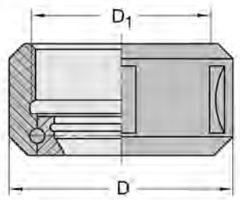

Ball bearing clamping nut

Size C-Spanner	For clamping nut	For collet
40 / 42	M 30 x 1,5 D = 43 mm	410E, 415E
45 / 50	M 40 x 1,5 D = 50 mm	ER 32
58 / 62	M 48 x 2,0 D = 60 mm	444E, 462E
58 / 62	M 50 x 1,5 D = 63 mm	ER 40

Clamping Tools

Intermediate sleeves

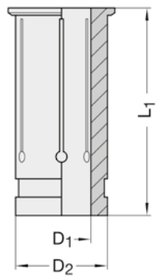

21026

D_2 mm	D_1 mm	L_1 mm	Part-No.
12	3	45	21026-0-12003-0
12	4	45	21026-0-12004-0
12	6	45	21026-0-12006-0
12	8	45	21026-0-12008-0
20	6	50,5	21026-0-20006-0
20	8	50,5	21026-0-20008-0
20	12	50,5	21026-0-20012-0
20	16	50,5	21026-0-20016-0
25	8	56,5	21026-0-25008-1
25	10	56,5	21026-0-25010-1
25	12	56,5	21026-0-25012-1
25	16	56,5	21026-0-25016-1
25	18	56,5	21026-0-25018-1
25	20	56,5	21026-0-25020-1

Technical details
Ground high-precision design. With collar - serveral times slotted.

Application
For use in hydraulic clamping chucks.

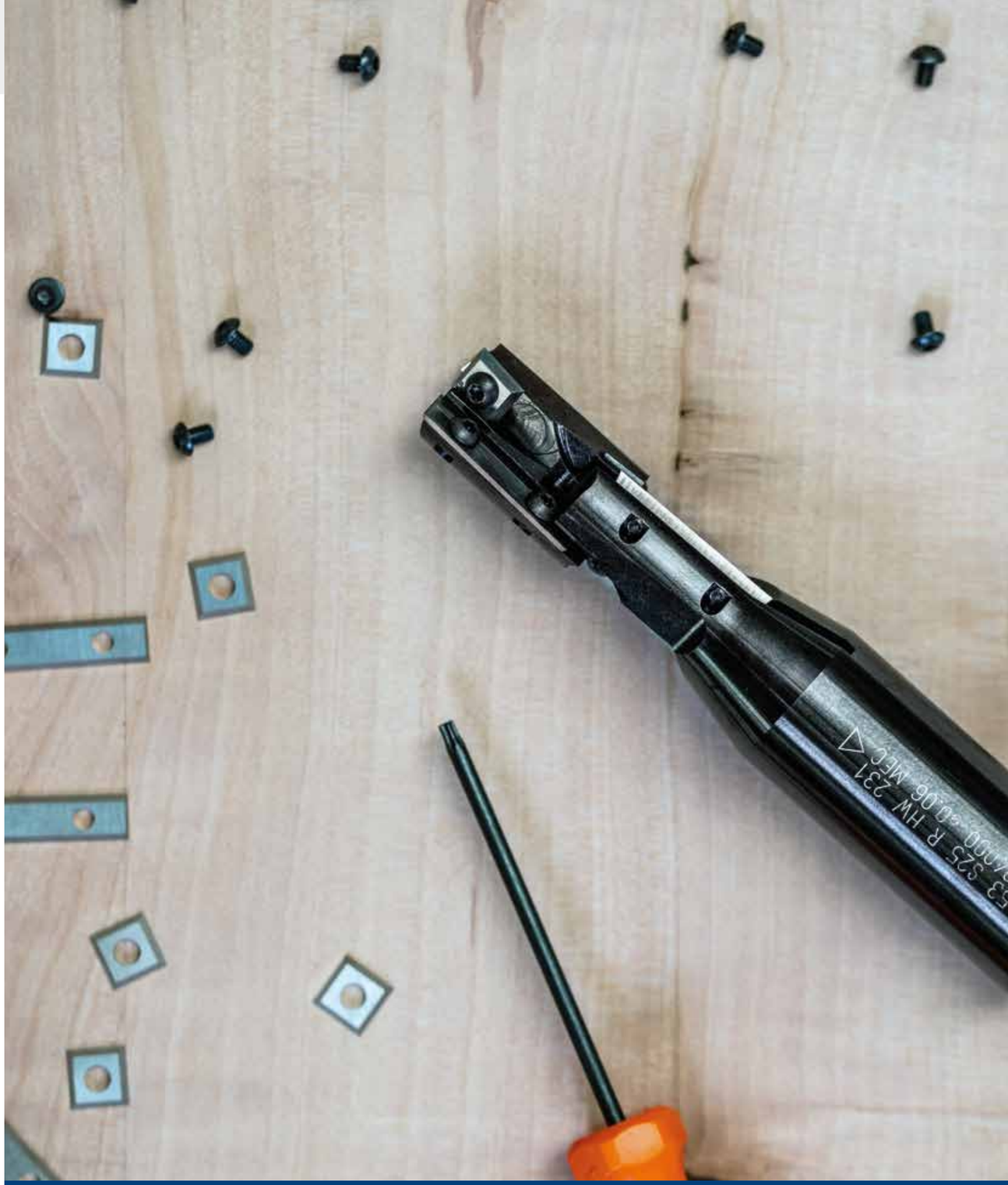

Spare Parts, Accessories and Services

Precision creates value

7

Reversible TC tips TH4,1 / 5,5

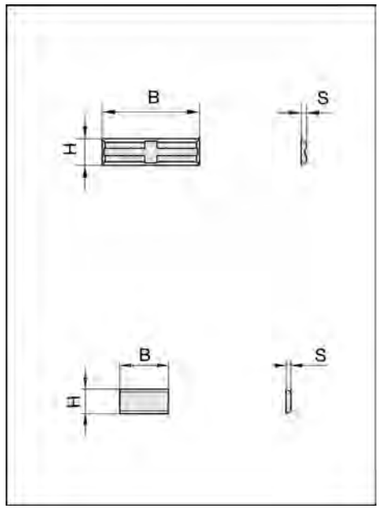

72013 / 72055

Dimensions B x H x S mm	TC-grade	Part-No.
4-sided, with transversal groove		
20 x 4,1 x 1,1	HW 01	72013-6-20411-0
20 x 4,1 x 1,1	HW 03	72013-6-20041-0
20 x 5,5 x 1,1	HW 03	72013-6-20055-0
25 x 5,5 x 1,1	HW 01	72013-6-25001-0
25 x 5,5 x 1,1	HW 03	72013-6-25055-0
30 x 5,5 x 1,1	HW 01	72013-6-30001-0
30 x 5,5 x 1,1	HW 02	72013-6-30055-0
40 x 5,5 x 1,1	HW 02	72013-6-40055-0
50 x 5,5 x 1,1	HW 01	72013-6-50001-0
50 x 5,5 x 1,1	HW 02	72013-6-50055-0
For No. 22610, 2-sided		
10,8 x 5,5 x 1,1	HW 02	72055-6-25000-0
11,3 x 5,5 x 1,1	HW 02	72055-6-26000-0
13,3 x 5,5 x 1,1	HW 02	72055-6-30000-0
15,3 x 5,5 x 1,1	HW 02	72055-6-34000-0
15,8 x 5,5 x 1,1	HW 02	72055-6-35000-0
18,3 x 5,5 x 1,1	HW 02	72055-6-40000-0

Please note packing unit (PU). PU = 10 pcs.

Reversible TC tips TH6 / 7

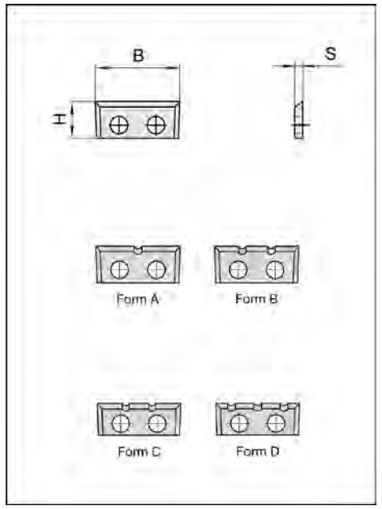

72120 / 72124 / 72125

Dimensions B x H x S mm	TC-grade	Part-No.
16,7 x 7 x 1,5	HW 02	72120-6-01600-0
23 x 7 x 1,5	HW 02	72120-6-02300-0
28 x 7 x 1,5	HW 02	72120-6-02800-0
With chip breaking grooves		
16 x 7 x 1,5 Form A	HW 02	72125-6-01600-A
16 x 7 x 1,5 Form B	HW 02	72125-6-01600-B
16 x 6 x 1,5 Form C	HW 02	72125-6-01600-C
16 x 6 x 1,5 Form D	HW 02	72125-6-01600-D
For No. 22029, 4-sided		
17,5 x 7 x 1,5	HW 01	72124-6-01751-0
17,5 x 7 x 1,5	HW 02	72124-6-01750-0
29,5 x 7 x 1,5	HW 01	72124-6-02951-0
29,5 x 7 x 1,5	HW 02	72124-6-02950-0

Please note packing unit (PU). PU = 10 pcs.

HW 01 = for MDF and extremely abrasive materials
HW 02 = standard grade
HW 03 = top standard grade
HW 04 = for solid wood

Reversible TC tips TH9

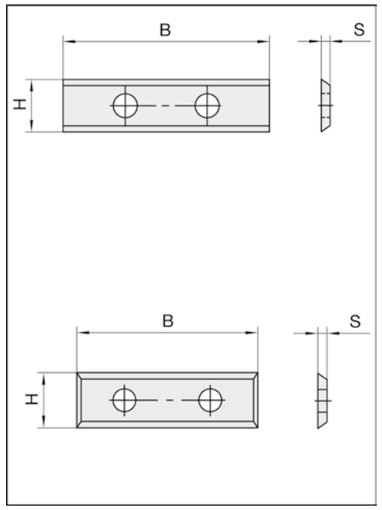

72005 2-sided

Dimensions B x H x S mm	TC-grade	Part-No.
35 x 9 x 1,5	HW 02	72005-6-03502-0

72005 4-sided

Dimensions B x H x S mm	TC-grade	Part-No.
Single-hole design		
9 x 9 x 1,5	HW 02	72005-6-00902-0
Two-hole design		
29,5 x 9 x 1,5	HW 01	72005-6-03001-0
29,5 x 9 x 1,5	HW 03	72005-6-03003-0
29,5 x 9 x 1,5	HW 02	72005-6-03005-0
39,5 x 9 x 1,5	HW 02	72005-6-04002-0
Three-hole design		
50 x 9 x 1,5	HW 01	72005-6-05001-0
50 x 9 x 1,5	HW 03	72005-6-05003-0

Please note packing unit (PU). PU = 10 pcs.

Reversible / interchangeable PCD tips

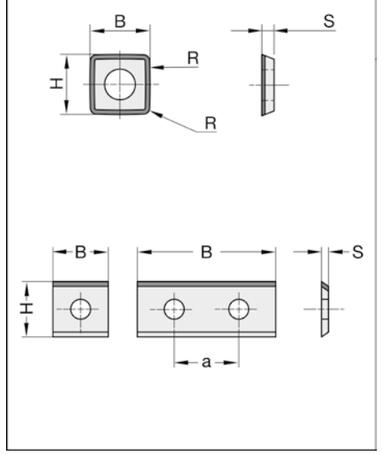

72010-9 / 72014-9

Dimensions B x H x S mm	Design	Part-No.
Single-hole design FourCut		
9,8 x 9,8 x 2,0	4-sided, convex design a. rounded edges	72014-9-09800-0
9,8 x 9,8 x 2,0	4-sided, for decorative groove cutter	72014-9-09800-4
14 x 9,8 x 2,0	2-sided, convex design, 90° sharp edges	72014-9-14980-0
Single-hole design		
12 x 12 x 1,5	1-sided	72010-9-01200-0
15 x 12 x 1,5	1-sided	72010-9-01500-0
20 x 12 x 1,5	1-sided	72010-9-02000-0
Two-hole design		
25 x 12 x 1,5	1-sided, a= 14 mm	72010-9-02500-0
30 x 12 x 1,5	1-sided, a= 14 mm	72010-9-03000-0
40 x 12 x 1,5	1-sided, a= 26 mm	72010-9-04000-0
50 x 12 x 1,5	1-sided, a= 26 mm	72010-9-05000-0

Please note packing unit (PU). PU = 1 piece.

PCD tips B = 12-50 mm for use in all standard cutter heads instead of TC tips.

Reversible TC tips TH10,5 / 12

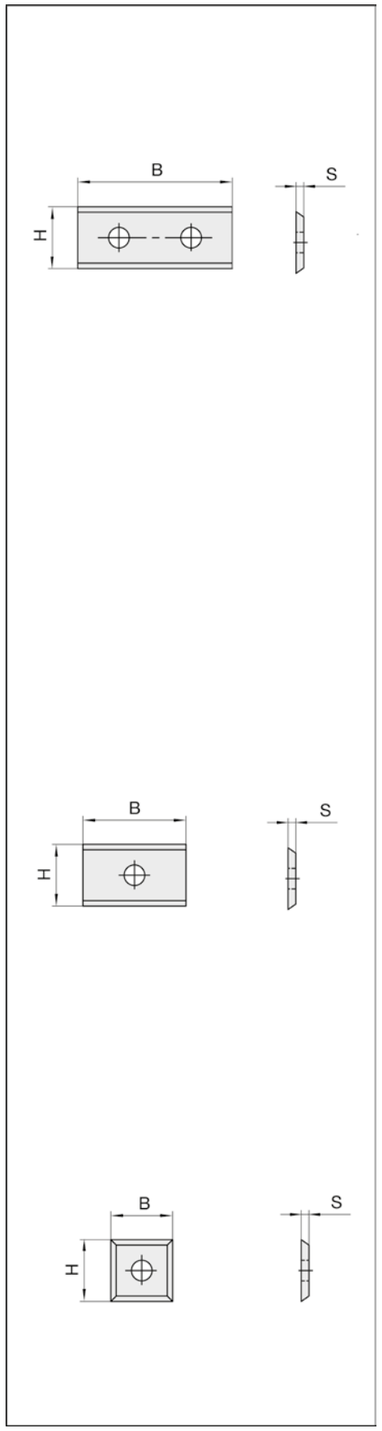

72010 2-sided

Dimensions B x H x S mm	TC-grade	Part-No.
Two-hole design		
25 x 12 x 1,5	HW 02	72010-6-02501-0
25 x 12 x 1,5	HW 03	72010-6-02504-0
30 x 12 x 1,5	HW 01	72010-6-03003-F
30 x 12 x 1,5	HW 02	72010-6-03001-0
30 x 12 x 1,5	HW 04	72010-6-03003-0
40 x 12 x 1,5	HW 01	72010-6-04003-F
40 x 12 x 1,5	HW 02	72010-6-04001-0
40 x 12 x 1,5	HW 03	72010-6-04004-0
40 x 12 x 1,5	HW 04	72010-6-04003-0
50 x 12 x 1,5	HW 01	72010-6-05003-F
50 x 12 x 1,5	HW 02	72010-6-05001-0
50 x 12 x 1,5	HW 04	72010-6-05003-0
60 x 12 x 1,5	HW 01	72010-6-06003-F
60 x 12 x 1,5	HW 02	72010-6-06001-0
60 x 12 x 1,5	HW 04	72010-6-06003-0
80 x 13 x 2,2	HW 04	72010-6-08001-0
100 x 13 x 2,2	HW 04	72010-6-10001-0
120 x 13 x 2,2	HW 04	72010-6-12001-0

72010 / 72050 2-sided

Dimensions B x H x S mm	TC-grade	Part-No.
Single-hole design		
7,5 x 12 x 1,5	HW 02	72010-6-00751-0
7,5 x 12 x 1,5	HW 04	72010-6-00753-0
9,0 x 12 x 1,5	HW 02	72010-6-00900-0
9,6 x 12 x 1,5	HW 02	72010-6-00960-0
10,5 x 12 x 1,5	HW 02	72050-6-25000-0
11 x 12 x 1,5	HW 02	72050-6-26000-0
13 x 12 x 1,5	HW 02	72050-6-30000-0
15 x 12 x 1,5	HW 01	72010-6-01500-F
15 x 12 x 1,5	HW 02	72010-6-01501-0
15 x 12 x 1,5	HW 04	72010-6-01503-0
15,7 x 12 x 1,5	HW 02	72050-6-35000-0
20 x 12 x 1,5	HW 01	72010-6-02000-F
20 x 12 x 1,5	HW 02	72010-6-02001-0
20 x 12 x 1,5	HW 03	72010-6-02003-0
25 x 12 x 1,5	HW 02	72010-6-02500-0

72010 4-sided

Dimensions B x H x S mm	TC-grade	Part-No.
10,5 x 10,5 x 1,5	HW 02	72010-6-01050-0

Please note packing unit (PU). PU = 10 pcs.

HW 01 = for MDF and extremely abrasive materials
HW 02 = standard grade
HW 03 = top standard grade
HW 04 = for solid wood
HW 22 = for plastics and solid hard wood

Reversible TC tips TH9,8 / 12

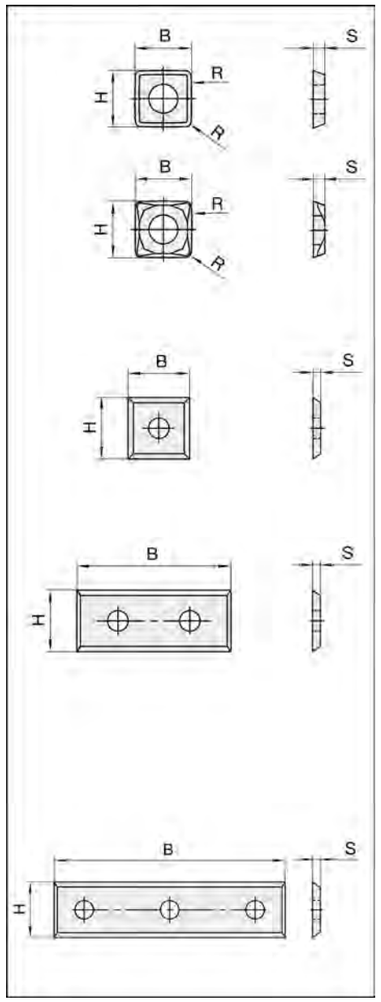

72014 4Cut

Dimensions B x H x S mm	TC-grade	Part-No.
For surfacing cutter		
9,8 x 9,8 x 2,0	HW 02	72014-6-09800-0
For decorative groove cutter		
9,8 x 9,8 x 2,0	HW 02	72014-6-09800-4

72014 4-sided

Dimensions B x H x S mm	TC-grade	Part-No.
Single-hole design		
12 x 12 x 1,5	HW 01	72014-6-01200-F
12 x 12 x 1,5	HW 02	72014-6-01201-0
12 x 12 x 1,5	HW 04	72014-6-01203-0
19,5 x 12 x 1,5	HW 02	72014-6-02000-0
19,5 x 12 x 1,5	HW 03	72014-6-02003-0
Two-hole design		
29,5 x 12 x 1,5	HW 01	72014-6-03000-F
29,5 x 12 x 1,5	HW 02	72014-6-03000-0
29,5 x 12 x 1,5	HW 03	72014-6-03003-0
29,5 x 12 x 1,5	HW 22	72014-6-03008-0
39,5 x 12 x 1,5	HW 02	72014-6-04000-0
39,5 x 12 x 1,5	HW 03	72014-6-04003-0
49,5 x 12 x 1,5	HW 01	72014-6-05000-F
49,5 x 12 x 1,5	HW 02	72014-6-05000-0
59,5 x 12 x 1,5	HW 01	72014-6-06000-F
59,5 x 12 x 1,5	HW 02	72014-6-06000-0

72016 4-sided

Dimensions B x H x S mm	TC-grade	Part-No.
Three-hole design		
50 x 12 x 1,7	HW 01	72016-6-05001-0
50 x 12 x 1,7	HW 02	72016-6-05017-0
50 x 12 x 1,7	HW 03	72016-6-05004-0

Please note packing unit (PU). PU = 10 pcs.

Reversible TC tips TH9 / 12

with bevel

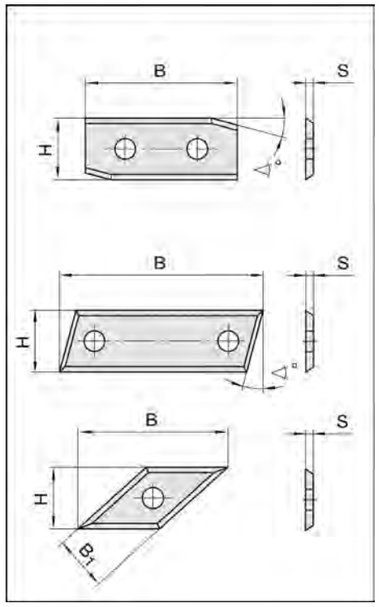

72015-L / -R

Dimensions B x H x S mm	Direction	TC-grade	Part-No.
29,5 x 12 x 1,5, 15°	left	HW 02	72015-6-02951-L
29,5 x 12 x 1,5, 15°	right	HW 02	72015-6-02951-R
30 x 12 x 1,5, 5°	left	HW 02	72015-6-03000-L
30 x 12 x 1,5, 5°	right	HW 02	72015-6-03000-R

72015

Dimensions B x H x S mm	For No.	TC-grade	Part-No.
27 x 9 x 1,5	22726	HW 03	72015-6-02703-R
40 x 12 x 1,5	22180 - 90°/91°	HW 01	72015-6-04001-R
40 x 12 x 1,5	22180 - 90°/91°	HW 02	72015-6-04015-L
40 x 12 x 1,5	22180 - 90°/91°	HW 02	72015-6-04015-R
50 x 12 x 1,5	22180 - 60°	HW 01	72015-6-05001-R
50 x 12 x 1,5	22180 - 60°	HW 02	72015-6-05060-R
60 x 12 x 1,5	22180 - 45°	HW 02	72015-6-06045-R
29,16/10,63 x 12 x 1,5	22180 Corner form.cttr.	HW 29	72015-6-29160-L
29,16/10,63 x 12 x 1,5	22180 Corner form.cttr.	HW 29	72015-6-29160-R

Please note packing unit (PU). PU = 10 pcs.

Reversible TC tips special forms

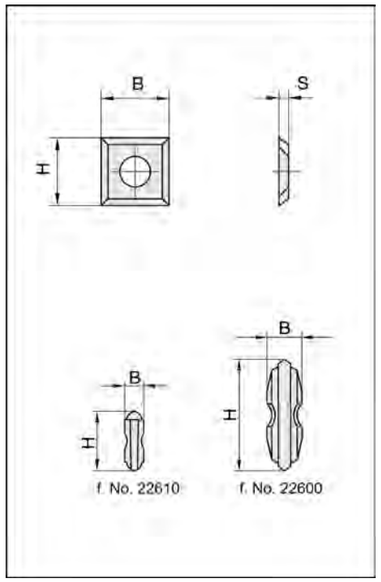

72020 / 72021 Spurs

Dimensions B x H x S mm	For No.	TC-grade	Part-No.
10,5 x 10,5 x 1,5		HW 29	72020-6-01050-0
14 x 14 x 1,2		HW 29	72020-6-01412-0
14 x 14 x 1,7		HW 29	72020-6-01417-0
14 x 14 x 2,0		HW 29	72020-6-01414-1
14 x 14 x 2,0	62300	HW 29	72020-6-01420-0
14,3 x 14,3 x 2,5		HW 04	72020-6-01430-0
For No. 22605			
10,9 x 10,9 x 1,5	22605	HW 01	72021-6-01090-0
13,4 x 13,4 x 1,5	22605	HW 01	72021-6-01340-0
15,9 x 15,9 x 1,5	22605	HW 01	72021-6-01590-0

39180 Spurs for No. 22600 / 22610

Dimensions B x H x S mm	For No.	TC-grade	Part-No.
12,7 x 4	22610 (JSO) right	HW 29	39180-6-00001-R
12,7 x 4	22610 (JSO) left	HW 29	39180-6-00001-L
18,0 x 6	22600 (Leuco)	HW 04	39180-6-00000-0

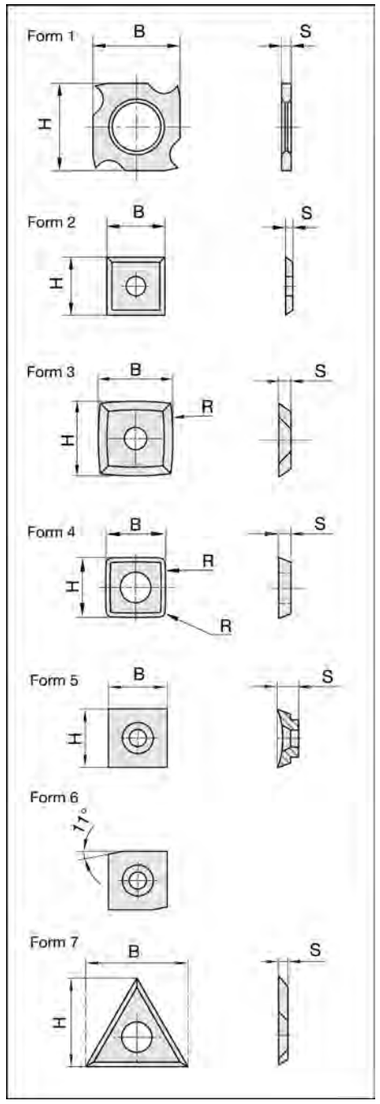

72018 4-sided

Dimensions B x H x S mm	Form	T.C. grade	Part-No.
17 x 17 x 2	2	HW 02	72018-6-01700-0

72019 Spurs 3-sided

Dimensions B x H x S mm	Form	T.C. grade	Part-No.
22 x 19 x 2	7	HW 29	72019-6-01900-0

72023 4-sided

Dimensions B x H x S mm	Form	T.C. grade	Part-No.
13,8 x 13,8 x 2,5	3 (R= 40 mm)	HW 02	72023-6-01380-0
15 x 15 x 2,5	3 (R= 50/05 mm)	HW 04	72023-6-01500-0
15 x 15 x 2,5	3 (R= 100 mm)	HW 02	72023-6-01515-0

72025 4-sided

Dimensions B x H x S mm	Form	T.C. grade	Part-No.
18 x 18x 2 (1,95)	1	HW 02	72025-6-00010-0
18 x 18 x 3,0	1	HW 02	72025-6-00030-0

72084

Dimensions B x H x S mm	Form	T.C. grade	Part-No.
11 x 11 x 4	5	HW 02	72084-6-11011-0
11 x 11 x 4	6	HW 02	72084-6-11075-R
20 x 11 x 4	5	HW 02	72084-6-20011-0

Please note packing unit (PU). PU = 10 pcs.

HW 01 = for MDF and extremely abrasive materials
HW 02 = standard grade
HW 03 = top standard grade
HW 04 = for solid wood
HW 22 = for plastics and solid hard woold
HW 29 = special grade for spurs

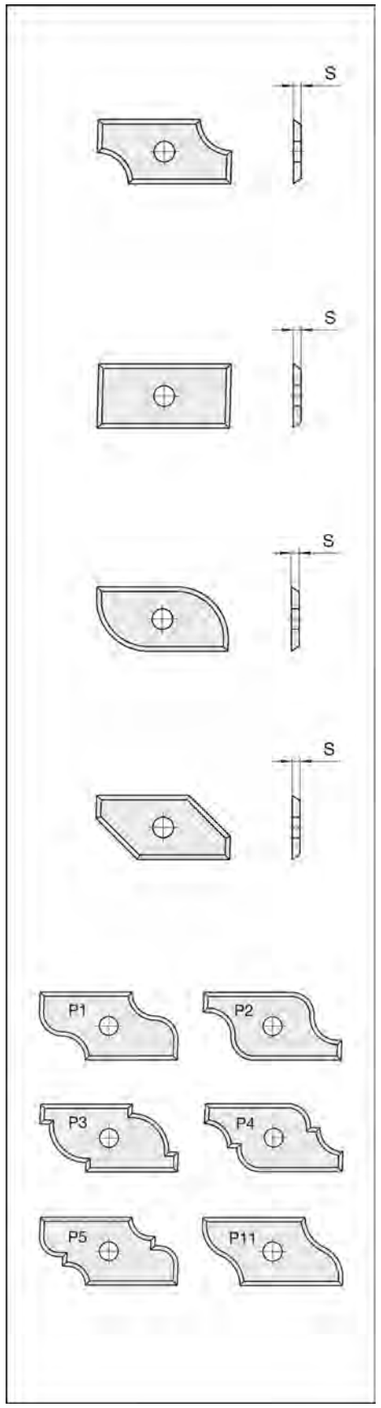

72140 Rounding over tips

Dimensions B x H x S mm	Design	TC-grade	Part-No.
19,4 x 9 x 1,5	R= 2 mm, size 1	HW 02	72140-6-00002-0
19,4 x 9 x 1,5	R= 3 mm, size 1	HW 02	72140-6-00003-0
19,4 x 9 x 1,5	R= 4 mm, size 1	HW 02	72140-6-00004-0
19,4 x 9 x 1,5	R= 5 mm, size 1	HW 02	72140-6-00005-0
26 x 12,5 x 1,5	R= 6 mm, size 2	HW 02	72140-6-00006-0
26 x 12,5 x 1,5	R= 8 mm, size 2	HW 02	72140-6-00008-0
30 x 14,5 x 1,5	R= 10 mm, size 3	HW 02	72140-6-00010-0

72142 Rebating tips

Dimensions B x H x S mm	Design	TC-grade	Part-No.
19,4 x 9 x 1,5	4-sided, size 1	HW 02	72142-6-19500-0
26 x 12,5 x 1,5	4-sided, size 2	HW 02	72142-6-26000-0
30 x 14,5 x 1,5	4-sided, size 3	HW 02	72142-6-30000-0

72145 Coving tips

Dimensions B x H x S mm	Design	TC-grade	Part-No.
19,4 x 9 x 1,5	R= 5 mm, size 1	HW 02	72145-6-00005-0
26 x 12,5 x 1,5	R= 6 mm, size 2	HW 02	72145-6-00006-0
26 x 12,5 x 1,5	R= 8 mm, size 2	HW 02	72145-6-00008-0
30 x 14,5 x 1,5	R= 10 mm, size 3	HW 02	72145-6-00010-0

72148 Bevelling tips

Dimensions B x H x S mm	Design	TC-grade	Part-No.
19,4 x 9 x 1,5	L_3= 5 mm, size 1	HW 02	72148-6-19545-0
26 x 12,5 x 1,5	L_3= 8 mm, size 2	HW 02	72148-6-26045-0
30 x 14,5 x 1,5	L_3= 10 mm, size 3	HW 02	72148-6-30045-0

72149 Standard profile tips

Dimensions B x H x S mm	Design	TC-grade	Part-No.
30 x 14,5 x 1,5	profile no. 1	HW 02	72149-6-00001-R
30 x 14,5 x 1,5	profile no. 2	HW 02	72149-6-00002-R
30 x 14,5 x 1,5	profile no. 3	HW 02	72149-6-00003-R
30 x 14,5 x 1,5	profile no. 4	HW 02	72149-6-00004-R
30 x 14,5 x 1,5	profile no. 5	HW 02	72149-6-00005-R
30 x 14,5 x 1,5	profile no. 11	HW 02	72149-6-30011-R

Please note packung unit (PU). PU = 2 pcs.

For use in JSO UNITEC universal profile router cutters No. 22140 (page 1.42) and No. 22150 (page 1.49).

Reversible profile tips TC

decorative groove

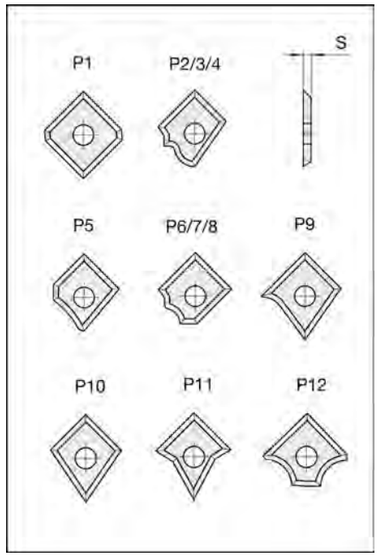

72190

Dimensions B x H x S mm	Design	TC-grade	Part-No.
12 x 12 x 1,5	profile no. 1 (f. no. 22193)	HW 03	72190-6-00001-R
12 x 12 x 1,5	profile no. 2/3/4	HW 03	72190-6-00004-R
12 x 12 x 1,5	profile no. 5	HW 03	72190-6-00005-R
12 x 12 x 1,5	profile no. 6/7/8	HW 03	72190-6-00008-R
12 x 12 x 1,5	profile no. 9	HW 03	72190-6-00009-R
12 x 12 x 1,5	profile no. 10	HW 03	72190-6-00010-R
12 x 12 x 1,5	profile no. 11	HW 03	72190-6-00011-R
12 x 12 x 1,5	profile no. 12	HW 03	72190-6-00012-R

For use in JSO decorative groove router cutter No. 22193 (page 1.14) or No. 22195 (page 4.28).

Reversible rounding over tips TC

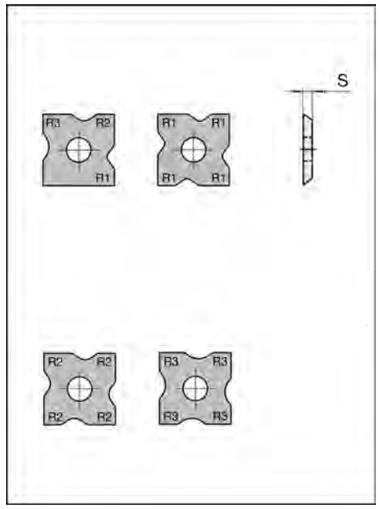

72240 4-sided

Dimensions B x H x S mm	Design	TC-grade	Part-No.
12 x 12 x 1,5	R= 1 / 2 / 3 mm	HW 02	72240-6-12123-R
12 x 12 x 1,5	R= 1 mm	HW 02	72240-6-12010-R
12 x 12 x 1,5	R= 1,5 mm	HW 02	72240-6-12015-R
12 x 12 x 1,5	R= 2 mm	HW 02	72240-6-12020-R
12 x 12 x 1,5	R= 2,5 mm	HW 02	72240-6-12025-R
12 x 12 x 1,5	R= 3 mm	HW 02	72240-6-12030-R

Please note packing unit (PU). PU = 10 pcs.

For use in JSO rounding over router cutter No. 22240-5 (page 1.41).

Interchangable rounding over / bevelling tips

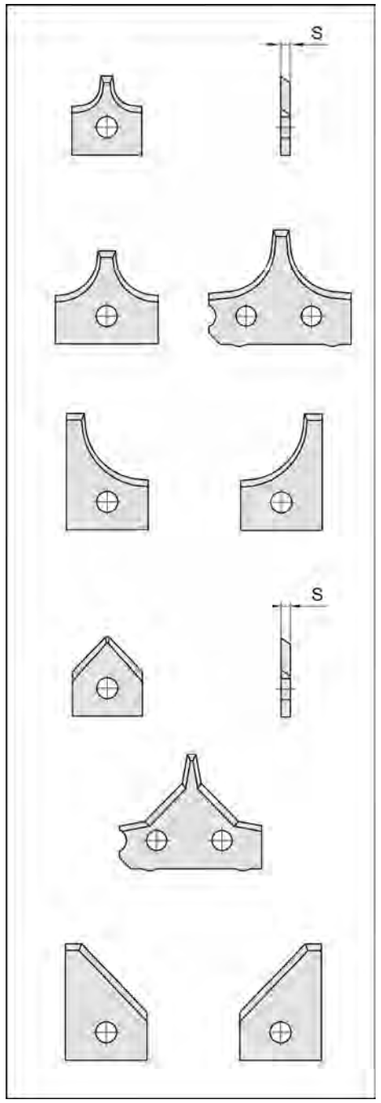

72432 Rounding over / bevelling tips

Dimensions B x H x S mm	Design	TC-grade	Part-No.
Size 1, for no. 22160 / 64410			
15 x 18 x 2	R= 2 mm	HW 04	72432-6-00020-0
15 x 18 x 2	R= 3 mm	HW 04	72432-6-00030-0
15 x 18 x 2	R= 4 mm	HW 04	72432-6-00040-0
15 x 18 x 2	R= 5 mm	HW 04	72432-6-00050-0
Size 2, for no. 22610			
30 x 25 x 2	R= 6 mm	HW 04	72432-6-20060-0
30 x 25 x 2	R= 8 mm	HW 04	72432-6-20080-0
Size 2, for no. 64410			
22 x 21 x 2	R= 6 mm	HW 04	72432-6-00060-0
22 x 21 x 2	R= 8 mm	HW 04	72432-6-00080-0
Size 3 for no. 22160 / 64410			
30 x 25 x 2	R= 10 mm	HW 02	72432-6-20100-0
30 x 25 x 2	R= 12 mm	HW 02	72432-6-20120-0
Size 3 for no. 64410			
17,5 x 26 x 2, top *	R= 10 mm	HW 04	72432-6-00100-1
17,5 x 26 x 2, bottom *	R= 10 mm	HW 04	72432-6-00100-2
17,5 x 26 x 2, top *	R= 12 mm	HW 04	72432-6-00120-1
17,5 x 26 x 2, bottom *	R= 12 mm	HW 04	72432-6-00120-2

72434 Bevelling tips

Dimensions B x H x S mm	Design	TC-grade	Part-No.
Size 1, for no. 22160 / 64410			
15 x 18 x 2	L_3 max. = 6 mm, size 1	HW 04	72434-6-10045-0
Size 2, only for no. 64410			
22 x 21 x 2	L_3 max. = 9 mm, size 2	HW 04	72434-6-20045-0
Size 3, for no. 22160 / 64410			
30 x 25 x 2	L_3 max. = 7 mm, size 3	HW 02	72434-6-20045-R
Size 3, only for no. 64410			
17,5 x 26 x 2, top *	L_3 max. = 12 mm, size 3	HW 04	72434-6-30045-1
17,5 x 26 x 2, bottom *	L_3 max. = 12 mm, size 3	HW 04	72434-6-30045-2

Please note packing unit (PU). PU = 2 pcs.

For use in JSO rounding over and bevelling cutter No. 22160 (page 4.30), or in rounding over / bevelling cutter set No. 64410 (page 4.32, 4.33).

* = for design up to May 09

Spare Parts, Accessories ...

Interchangeable rounding over / bevelling tips

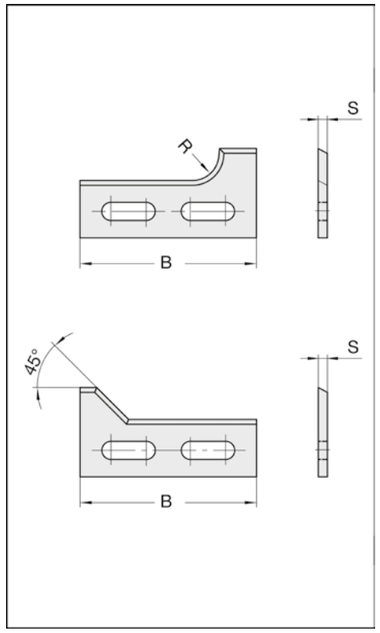

72510

Dimensions B x H x S mm	Design	TC-grade	Part-No.
Rounding over tips size 1			
40 x 17,2 x 2,2	R= 3 mm, size 1, top	HW 04	72510-6-40030-1
40 x 17,2 x 2,2	R= 3 mm, size 1, bottom	HW 04	72510-6-40030-2
40 x 18,2 x 2,2	R= 4 mm, size 1, top	HW 04	72510-6-40040-1
40 x 18,2 x 2,2	R= 4 mm, size 1, bottom	HW 04	72510-6-40040-2
40 x 19,2 x 2,2	R= 5 mm, size 1, top	HW 04	72510-6-40050-1
40 x 19,2 x 2,2	R= 5 mm, size 1, bottom	HW 04	72510-6-40050-2
40 x 20,2 x 2,2	R= 6 mm, size 1, top	HW 04	72510-6-40060-1
40 x 20,2 x 2,2	R= 6 mm, size 1, bottom	HW 04	72510-6-40060-2
Rounding over tips size 2			
50 x 20,3 x 2,2	R= 6 mm, size 2, top	HW 04	72510-6-50060-1
50 x 20,3 x 2,2	R= 6 mm, size 2, bottom	HW 04	72510-6-50060-2
50 x 20,3 x 2,2	R= 8 mm, size 2, top	HW 04	72510-6-50080-1
50 x 20,3 x 2,2	R= 8 mm, size 2, bottom	HW 04	72510-6-50080-2
50 x 24,3 x 2,2	R= 10 mm, size 2, top	HW 04	72510-6-50100-1
50 x 24,3 x 2,2	R= 10 mm, size 2, bottom	HW 04	72510-6-50100-2
Bevelling tips size 1			
40 x 20,2 x 2,2	angle = 45°, size 1, top	HW 04	72510-6-40450-1
40 x 20,2 x 2,2	angle = 45°, size 1, bottom	HW 04	72510-6-40450-2
Bevelling tips size 2			
50 x 20,2 x 2,2	angle = 45°, size 2, top	HW 04	72510-6-50450-1
50 x 20,2 x 2,2	angle = 45°, size 2, bottom	HW 04	72510-6-50450-2

Please note packing unit (PU). PU = 2 pcs.

For use in JSO rounding over / bevelling cutter No. 22510 (page 4.31)

Interchangeable profile tips TC

glue joint profiles

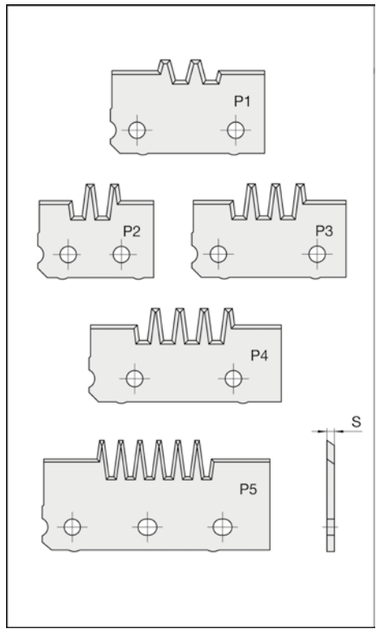

72560

Dimensions B x H x S mm	Design	TC-grade	Part-No.
30 x 25 x 2	profile no. 2	HW 02	72560-6-30002-R
40 x 25 x 2	profile no. 1	HW 02	72560-6-40001-R
40 x 25 x 2	profile no. 3	HW 02	72560-6-40003-R
50 x 25 x 2	profile no. 4	HW 02	72560-6-50004-R
60 x 30 x 2	profile no. 5	HW 02	72560-6-60005-R

Please note packing unit (PU). PU = 2 pcs.

For use in JSO glue joint profile router cutter No. 22560 (page 4.52).

Interchangeable TC knives

RAPIDO

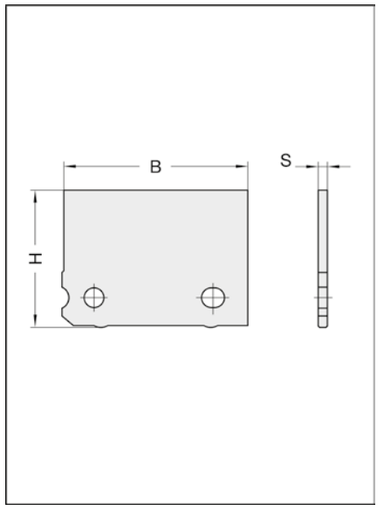

72529 / 72530 / 72534

Dimensions B x H x S mm	Knife No.	Design	TC-grade	Part-No.
20 x 25 x 2	-	unprofiled	HW 02	72530-6-20250-R
20 x 25 x 2	-	profiled	HW 02	72530-6-20251-R
25x17,5x 1,7	10	unprofiled	HW 02	72530-6-25170-R
25x17,5x 1,7	10	profiled	HW 02	72530-6-25171-R
25 x 20 x 2	22	unprofiled	HW 02	72530-6-25200-R
25 x 20 x 2	22	profiled	HW 02	72530-6-25201-R
25 x 25 x 2	16	unprofiled	HW 02	72529-6-25250-R
25 x 25 x 2	16	profiled	HW 02	72529-6-25251-R
25 x 25 x 2	23	unprofiled	HW 02	72530-6-25250-R
25 x 25 x 2	23	profiled	HW 02	72530-6-25251-R
25 x 30 x 2	25	unprofiled	HW 02	72530-6-25300-R
25 x 30 x 2	25	profiled	HW 02	72530-6-25301-R
30 x 20 x 2	1	unprofiled	HW 02	72530-6-30200-R
30 x 20 x 2	1	profiled	HW 02	72530-6-30201-R
30 x 25 x 2 *	2/2a+b	unprofiled	HW 02	72530-6-30250-R
30 x 25 x 2 *	2/2a+b	profiled	HW 02	72530-6-30251-R
30 x 30 x 2	3/3a+b/48	unprofiled	HW 02	72530-6-30300-R
30 x 30 x 2	3/3a+b/48	profiled	HW 02	72530-6-30301-R
30 x 35 x 2 *	50	unprofiled	HW 02	72530-6-30350-R
30 x 35 x 2 *	50	profiled	HW 02	72530-6-30351-R
32 x 15 x 1,5	24	unprofiled	HW 02	72529-6-32150-R
32 x 15 x 1,5	24	profiled	HW 02	72529-6-32151-R
40 x 20 x 2	4	unprofiled	HW 02	72530-6-40200-R
40 x 20 x 2	4	profiled	HW 02	72530-6-40201-R
40 x 25 x 2	5/5a+b	unprofiled	HW 02	72530-6-40250-R
40 x 25 x 2	5/5a+b	profiled	HW 02	72530-6-40251-R
40 x 30 x 2	6/6a+b/49	unprofiled	HW 02	72530-6-40300-R
40 x 30 x 2	6/6a+b/49	profiled	HW 02	72530-6-40301-R
50 x 20 x 2	7	unprofiled	HW 02	72530-6-50200-R
50 x 20 x 2	7	profiled	HW 02	72530-6-50201-R
50 x 25 x 2	8/8a+b	unprofiled	HW 02	72530-6-50250-R
50 x 25 x 2	8/8a+b	profiled	HW 02	72530-6-50251-R
50 x 30 x 2	9/9a+b/15/47	unprofiled	HW 02	72530-6-50300-R
50 x 30 x 2	9/9a+b/15/47	profiled	HW 02	72530-6-50301-R
60 x 30 x 2	27/27a+b	unprofiled	HW 02	72530-6-60300-R
60 x 30 x 2	27/27a+b	profiled	HW 02	72530-6-60301-R
60 x 40 x 2	30	unprofiled	HW 02	72534-6-60400-R
60 x 40 x 2	30	profiled	HW 02	72534-6-60401-R
100 x 30 x 2,5	28	unprofiled	HW 02	72530-6-10300-R
100 x 30 x 2,5	28	profiled	HW 02	72530-6-10301-R

* HW 01 s. page 7.14

72530/72440/72542 spec. f. No. 22530-97 / 22542 / 22440

Dimensions B x H x S mm	Knife No.	Design	TC-grade	Part-No.
40 x 50 x 2	20/21	unprofiled	HW 02	72530-6-40500-R
40 x 50 x 2	20	profiled	HW 02	72530-6-40501-R
40 x 50 x 2	21	profiled	HW 02	72542-6-40501-R
40 x 66 x 2	29	unprofiled	HW 02	72440-6-40660-R
40 x 66 x 2	29	profiled	HW 02	72440-6-40661-R

HW 02 = standard grade

Quantity discounts, same profile: 5 - 9 pcs. = 12%, up from 10 pcs. = 25%.
Template costs: see page 7.32

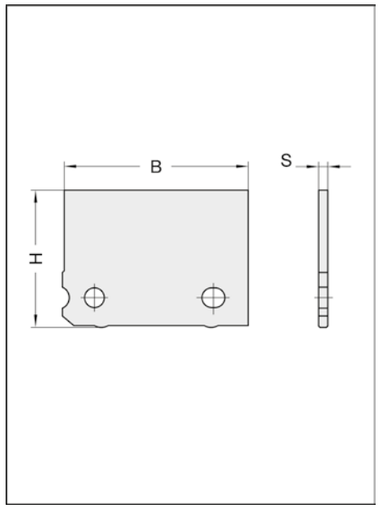

72530 / 72531

Dimensions B x H x S mm	Knife No.	Design	TC-grade	Part-No.
20 x 30 x 2	26	unprofiled	HW 04	72530-6-20300-R
20 x 30 x 2	26	profiled	HW 04	72530-6-20301-R
25 x 30 x 2	25	unprofiled	HW 04	72531-6-25300-R
25 x 30 x 2	25	profiled	HW 04	72531-6-25301-R
30 x 20 x 2	1	unprofiled	HW 04	72531-6-30200-R
30 x 20 x 2	1	profiled	HW 04	72531-6-30201-R
30 x 25 x 2	2/2a+b	unprofiled	HW 04	72531-6-30250-R
30 x 25 x 2	2/2a+b	profiled	HW 04	72531-6-30251-R
30 x 30 x 2	3/3a+b/48	unprofiled	HW 04	72531-6-30300-R
30 x 30 x 2	3/3a+b/48	profiled	HW 04	72531-6-30301-R
30 x 35 x 2	50	unprofiled	HW 04	72530-6-30040-R
30 x 35 x 2	50	profiled	HW 04	72530-6-30041-R
40 x 20 x 2	4	unprofiled	HW 04	72531-6-40200-R
40 x 20 x 2	4	profiled	HW 04	72531-6-40201-R
40 x 25 x 2	5/5a+b	unprofiled	HW 04	72531-6-40250-R
40 x 25 x 2	5/5a+b	profiled	HW 04	72531-6-40251-R
40 x 30 x 2	6/6a+b/49	unprofiled	HW 04	72531-6-40300-R
40 x 30 x 2	6/6a+b/49	profiled	HW 04	72531-6-40301-R
50 x 20 x 2	7	unprofiled	HW 04	72531-6-50200-R
50 x 20 x 2	7	profiled	HW 04	72531-6-50201-R
50 x 25 x 2	8/8a+b	unprofiled	HW 04	72531-6-50250-R
50 x 25 x 2	8/8a+b	profiled	HW 04	72531-6-50251-R
50 x 30 x 2	9/9a+b/15/47	unprofiled	HW 04	72531-6-50300-R
50 x 30 x 2	9/9a+b/15/47	profiled	HW 04	72531-6-50301-R
70 x 30 x 2	17/19/19a+b	unprofiled	HW 04	72530-6-70300-R
70 x 30 x 2	17/19/19a+b	profiled	HW 04	72530-6-70301-R

72533 specially for No. 22532

Dimensions B x H x S mm	Knife No.	Design	TC-grade	Part-No.
40 x 30 x 2	18	unprofiled	HW 01	72533-6-18010-R
40 x 30 x 2	18	profiled	HW 01	72533-6-18011-R
40 x 30 x 2	18	unprofiled	HW 04	72533-6-18040-R
40 x 30 x 2	18	profiled	HW 04	72533-6-18041-R

HW 01 = for MDF and extremely abrasive material
HW 02 = standard grade
HW 04 = for solid wood
Unless otherwise instructed, we supply HW 02 (standard TC grade).

Quantity discounts, same profile: 5 - 9 pcs. = 12%, up from 10 pcs. = 25%.
Template costs: see page 7.32

Interchangeable TC knives RAPIDO

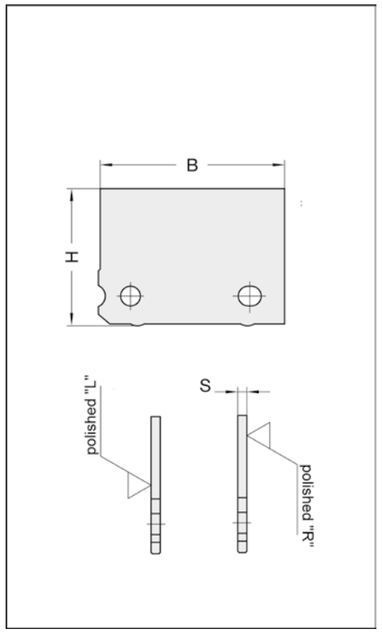

72750 / 72751 polished face

Dimensions B x H x S mm	Direction	Design	TC-grade	Part-No.
For right-hand rotation				
30 x 20 x 2	right	unprofiled	HW 04	72751-6-30200-R
30 x 20 x 2	right	profiled	HW 04	72750-6-30201-R
30 x 25 x 2	right	unprofiled	HW 04	72751-6-30250-R
30 x 25 x 2	right	profiled	HW 04	72750-6-30251-R
30 x 30 x 2	right	unprofiled	HW 04	72751-6-30300-R
30 x 30 x 2	right	profiled	HW 04	72750-6-30301-R
For left-hand rotation				
30 x 20 x 2	left	unprofiled	HW 04	72751-6-30200-L
30 x 20 x 2	left	profiled	HW 04	72750-6-30201-L
30 x 25 x 2	left	unprofiled	HW 04	72751-6-30250-L
30 x 25 x 2	left	profiled	HW 04	72750-6-30251-L
30 x 30 x 2	left	unprofiled	HW 04	72751-6-30300-L
30 x 30 x 2	left	profiled	HW 04	72750-6-30301-L

HW 04 = for solid wood

Quantity discounts, same profile: 5 to 9 pcs = 12 %, up from 10 pcs = 25 %
Template costs: see page 7.32

Polished face for highest tool life and improved cutting quality.
For left- and right-hand rotation in all RAPIDO profile cutters. Also in custom made profile cutters for machining sash bars.

Interchangeable TC knives for LEUCO-Super-Profiler

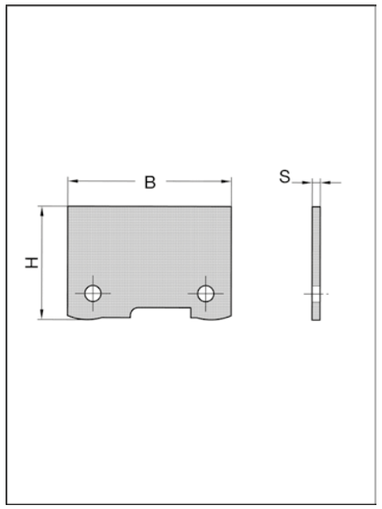

72490

Dimensions B x H x S mm	Design	TC-grade	Part-No.
Interch. TC knives			
40,6 x 28,2 x 1,5	unprofiled	HW 04	72490-6-42840-R
40,6 x 28,2 x 1,5	profiled	HW 04	72490-6-42841-R
60,8 x 30,2 x 1,5	profiled	HW 04	72490-6-63041-R
60,6 x 45,6 x 2	unprofiled	HW 04	72490-6-64540-R
60,6 x 45,6 x 2	profiled	HW 04	72490-6-64541-R
Back supports			
40 x 26,5 x 4	unprofiled	-	72490-0-42800-R
40 x 26,5 x 4	profiled	-	72490-0-42801-R
60 x 43 x 6	unprofiled	-	72490-0-64500-R
60 x 43 x 6	profiled	-	72490-0-64501-R

HW 02 = standard grade
HW 04 = for solid wood

Quantity discounts, same profile: 5 - 9 pcs. = 12%, up from 10 pcs. = 25%.
Template costs: see page 7.32

Interchangeable TC knives

for Multi-Profilers with support plates

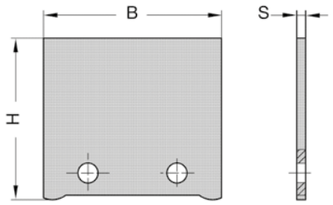

72460 - 72485

Dimensions B x H x S mm	For No.	Design	TC-grade	Part-No.
30 x 25 x 2	22480	unprofiled	HW 01	72530-6-30010-R
30 x 25 x 2	22480	profiled	HW 01	72480-6-30011-R
30 x 35 x 2	22470	unprofiled	HW 01	72530-6-30110-R
30 x 35 x 2	22470	profiled	HW 01	72470-6-30011-R
40 x 36 x 2	22470	unprofiled	HW 01	72470-6-40010-A
40 x 36 x 2	22470	profiled	HW 01	72470-6-40011-A
40 x 36 x 2	22470	unprofiled	HW 01	72470-6-40010-B
40 x 36 x 2	22470	profiled	HW 01	72470-6-40011-B
40 x 36 x 2	22470	profiled	HW 01	72470-6-40041-B
40 x 36 x 2	22460/80/85	unprofiled	HW 01	72480-6-40010-R
40 x 36 x 2	22460	profiled	HW 01	72460-6-40011-R
40 x 36 x 2	22480	profiled	HW 01	72480-6-40011-R
40 x 36 x 2	22485	profiled	HW 01	72485-6-40011-R
60 x 41 x 2	22460/85	unprofiled	HW 01	72485-6-60010-R
60 x 41 x 2	22460	profiled	HW 01	72460-6-60011-R
60 x 41 x 2	22485	profiled	HW 01	72485-6-60011-R
60 x 41 x 2	22480	unprofiled	HW 01	72480-6-60010-R
60 x 41 x 2	22480	profiled	HW 01	72480-6-60011-R
30 x 25 x 2	22480	profiled*	HW 04	72480-6-30041-R
30 x 35 x 2	22470	profiled*	HW 04	72470-6-30041-R
40 x 36 x 2	22470	unprofiled	HW 04	72470-6-40040-A
40 x 36 x 2	22470	profiled	HW 04	72470-6-40041-A
40 x 36 x 2	22470	unprofiled	HW 04	72470-6-40040-B
40 x 36 x 2	22460/80/85	unprofiled	HW 04	72480-6-40040-R
40 x 36 x 2	22460	profiled	HW 04	72460-6-40041-R
40 x 36 x 2	22480	profiled	HW 04	72480-6-40041-R
40 x 36 x 2	22485	profiled	HW 04	72485-6-40041-R
60 x 41 x 2	22460/85	unprofiled	HW 04	72485-6-60040-R
60 x 41 x 2	22460	profiled	HW 04	72460-6-60041-R
60 x 41 x 2	22485	profiled	HW 04	72485-6-60041-R
60 x 41 x 2	22480	unprofiled	HW 04	72480-6-60040-R
60 x 41 x 2	22480	profiled	HW 04	72480-6-60041-R

*** un**profiled blanks, HW 04, in the dimensions 30 x 25 mm and 30 x 35 mm see page 7.11.

HW 01 = for MDF and extremely abrasive materials
HW 04 = for solid wood

Interchangeable knives in **standard grade HW 02** are specified together with the appropriate support plates on the pages of corresponding basic tool bodies (pages 4.54 - 4.57).

Quantity discounts, same profile: 5 to 9 pcs = 12 %, up from 10 pcs = 25%.
Template costs: see page 7.32

Interchangeable TC pins and tips

for Novitec

Size 1 = for Ø 16 - 20 mm (L_1 = 5,5 mm)
Size 2 = for Ø from 21 mm (L_1 = 7,0 mm)

straight (without shear angle)
with shear angle down-cut (R.H. rotation)
with shear angle up-cut (R.H. rotation)

72090

Design	For size	L_1 mm	Part-No.
Interch. TC cutting pins, for R.H. rotation			
straight	1	5,5	72090-6-10050-0
down-cut	1	5,5	72090-6-10050-1
up-cut	1	5,5	72090-6-10050-2
straight	2	7,0	72090-6-20050-0
down-cut	2	7,0	72090-6-20050-1
up-cut	2	7,0	72090-6-20050-2

Please note packing unit (PU). PU = 20 pcs

For use in JSO NOVITEC roughing router cutters No. 20300 (No. 20310) page 4.14 Size 1 for D= 16 - 20 mm, size 2 for D= up from 21 mm.

Interchangeable TC plunge tips

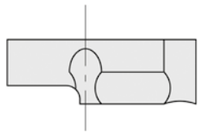

72095

Design	Part-No.
For Left-hand rotation	
for Ø 18 mm	72095-6-18000-L
for Ø 20 mm	72095-6-20000-L
for Ø 24 mm	72095-6-24000-L
For Right-hand rotation	
for Ø 14 mm	72095-6-14000-R
for Ø 14,5 mm	72095-6-14500-R
for Ø 15 mm	72095-6-15000-R
for Ø 15,5 mm	72095-6-15500-R
for Ø 16 mm	72095-6-16000-R
for Ø 16,5 mm	72095-6-16500-R
for Ø 18 mm	72095-6-18000-R
for Ø 19,05 mm (¾“)	72095-6-19050-R
for Ø 20 mm	72095-6-20000-R
for Ø 24 mm	72095-6-24000-R

Please note packing unit (PU). PU = 2 pcs

For use in JSO NOVITEC roughing router cutters No. 20300 (No. 20310) page 4.14 and in lock case cutters No. 22315.

Edge bevelling/rounding knives TC

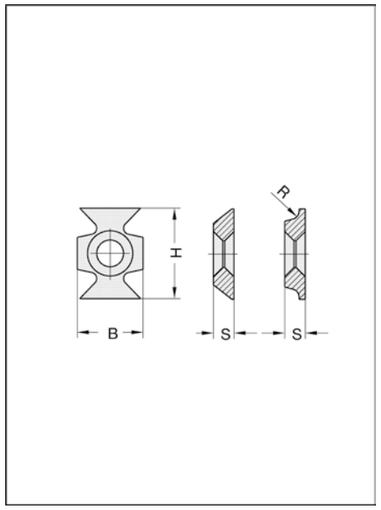

72160

Dimensions B x H x S mm	R/Angle mm/°	Design	TC-grade	Part-No.
16 x 22 x 5	2	rounding	HW 02	72160-6-00020-0
16 x 22 x 5	3	rounding	HW 02	72160-6-00030-0
16 x 22 x 5	45°	bevelling	HW 02	72160-6-00045-0

Please note packing unit (PU). PU = 2 pcs.

Novitec Grinding Device

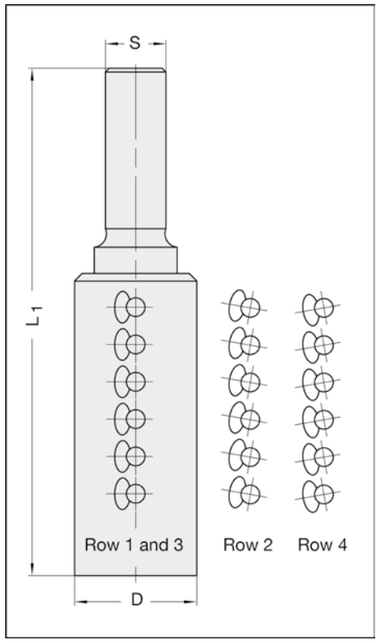

21160

D mm	L_1 mm	Shank mm	Part-No.
32,5	135	16 x 50	21160-0-00004-0

Technical details
Universal grinding device for all Novitec cutting pins size 1 + 2, as well as for the plunge tips D = 16/18/20/24 mm.

Application
For regrinding/sharpening of Novitec TC cutting pins, with our without shear angle, as well as for Novitec TC plunge tips.

Prices for sharpening cutting pins + plunge tips on request.

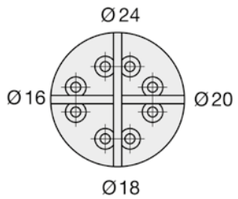

Keys

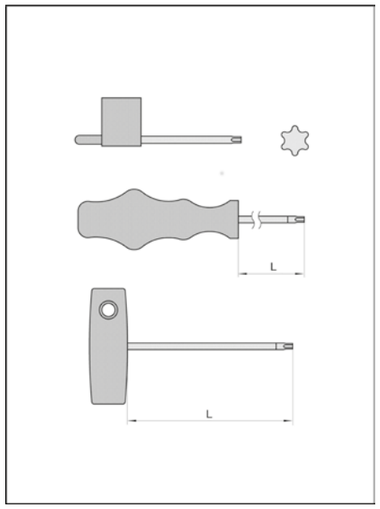

39077

Size	L mm	Part-No.
Key with flag		
T 7		39077-0-02507-1
T 8		39077-0-03008-1
T 9		39077-0-03009-1
T15		39077-0-04015-1
Key with handle		
T 8	60	39077-0-03008-2
T 9	60	39077-0-03009-2
T10	80	39077-0-03010-2
T15	80	39077-0-04015-2
T20	100	39077-0-00020-2
Key with T-handle		
T 9	100	39077-0-03009-3
T10	100	39077-0-03010-3
T15	100	39077-0-04015-3

Please note packing unit (PU). PU = 1 pc (key with flag = 5 pcs).

Keys

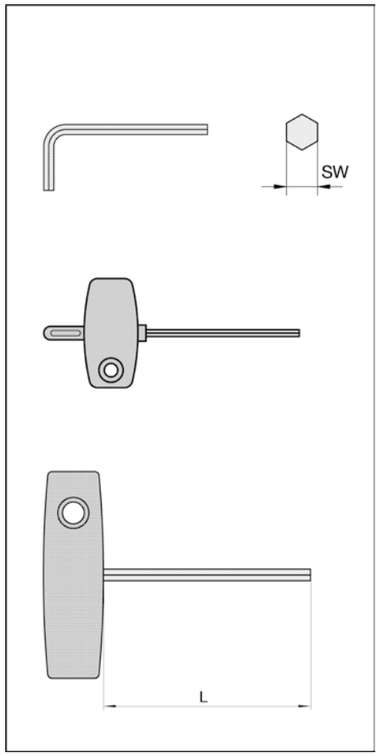

39120 / 39140 Hexagon keys

Size	L mm	Part-No.
Allen key		
SW 2		39120-0-02000-0
SW 2,5		39120-0-02500-0
SW 3		39120-0-03000-0
SW 4		39120-0-04000-0
SW 5		39120-0-05000-0
SW 6		39120-0-06000-0
SW 8		39120-0-08000-0
SW 10		39120-0-10000-0
SW 12		39120-0-12000-0
Allen key with flag		
SW 2,5		39120-0-02500-1
Key with T-handle		
SW 3	100	39140-0-00301-0
SW 3	150	39140-0-00302-0
SW 4	100	39140-0-00401-0
SW 5	100	39140-0-00501-0
SW 6	100	39140-0-00601-0
SW 8	100	39140-0-00801-0
SW 8	150	39140-0-00802-0
SW 10	100	39140-0-01001-0
SW 10	200	39140-0-01002-0

Please note packing unit (PU). No. 39120: PU = 5 pcs - No. 39140: PU = 1 pc.

C-Spanners / Engineers´wrench

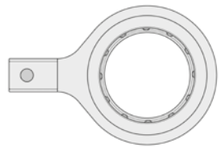

39155 Roller bearing wrench insert

Size	For	Part-No.
50	D= 50 mm (Preziso chuck)	39155-0-50000-2
63	D= 63 mm (Preziso turbine)	39155-0-63000-2

Technical details / Application
For safety, fast and simple clamping of tools without risk of injury. Prevent slipping in opposite to standard - or hook-keys. With square 14 x 18 mm suitable to torque spanners No. 39156 and No. 39256 on page 7.19.

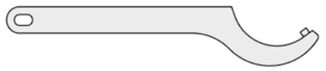

39155 / 39157 C-Spanners special design

Size	For	Part-No.
45/50	Preziso chuck, with pin	39155-0-50000-0
45/50	SINO chuck, with pin	39157-0-45500-0
95/100	Dust extraction turbine with D= 100 mm	39157-0-10000-0

39158 C-Spanners

Size	For clamping nut	Part-No.
40/42	M 30 x 1,5	39158-0-40421-0
45/50	M 40 x 1,5	39158-0-45500-0
58/62	M 48 x 2,0 and M 50 x 1,5	39158-0-58622-0

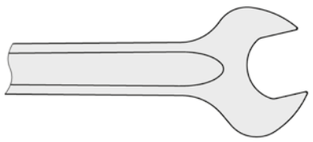

39162 Engineers`wrench

Size	Part-No.
SW 13	39162-0-00013-0
SW 25	39162-0-00025-0
SW 27	39162-0-00027-0
SW 33	39162-0-00033-0
SW 36	39162-0-00036-0
SW 41	39162-0-00041-0
SW 46	39162-0-00046-0

Torque Spanners

39156 Key

Range	Connection mm	L_1 mm	Part-No.
60 - 300 Nm	14 x 18	580	39156-0-00300-0

Technical details / Application
For safe clamping of shank-type tools. Without spanner insert.

39256 Key

Range	Connection mm	L_1 mm	Part-No.
40 - 200 Nm	14 x 18	480	39256-0-00200-0

Technical details / Application
Fast torque adjustment thanks of sliding button. Integrated loupe for improved reading precision.
Lock bottom on the grip end. Without spanner insert.

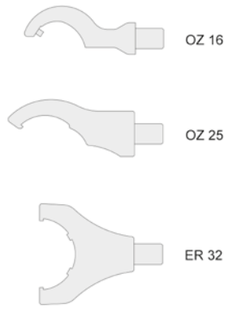

39156 / 39256 Spanner inserts

Description	For clamping nut	Part-No.
Spanner insert C-form		
Sino	-	39156-0-00045-Z
ER 25	M 32	39156-0-00025-0
ER 32	M 40	39156-0-00032-1
ER 40	M 50	39156-0-00040-0
OZ 16	M 30 / M 32	39156-0-00045-N
Preziso	TP Ø 40 x 1,5	39156-0-00050-0
OZ 25	M 48 / M 50	39156-0-00058-0
Spanner insert U-form		
ER 32	M 40	39156-0-00032-0

Technical details / Application
With square 14 x 18 mm suitable for torque wrenches No. 39156 and No. 39256.

Spare Parts, Accessories ...

Allen Screws

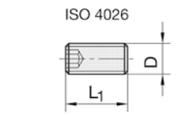

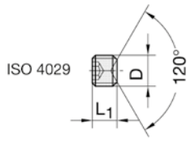

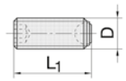

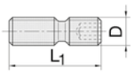

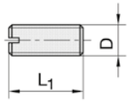

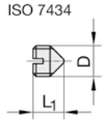

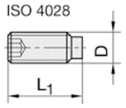

39021 with hexagon socket and flat point

Dimensions D x L_1	Form	Part-No.
M 4 x 4	ISO 4026	39021-0-04040-R
M 5 x 5	ISO 4026	39021-0-05050-R
M 5 x 10	ISO 4026	39021-0-05100-R
M 6 x 6	ISO 4026	39021-0-06060-R

39070 with hexagon socket and cup point

Dimensions D x L_1	Form	Part-No.
M 5 x 4	ISO 4029	39070-0-05040-R
M 6 x 4	ISO 4029	39070-0-06040-R
M 6 x 5	ISO 4029	39070-0-06050-R
M 6 x 6	ISO 4029	39070-0-06060-R

39072 / 39115

Dimensions D x L_1	Form	Part-No.
M 6 x 10	ball pressing screw	39072-0-06010-R
M 8 x 12	ball pressing screw	39072-0-08012-R
M 8 x 20	ball pressing screw	39072-0-08020-R
M 3 / M 4	clamping screw right/left	39115-0-00001-0

39074 / 39075

Dimensions D x L_1	Form	Part-No.
M 5 x 5	ISO 7434	39074-0-05050-R
M 5 x 8	ISO 4766, slotted, with flat point	39075-0-05080-R
M 5 x 12	ISO 4766, slotted, with flat point	39075-0-05120-R
M 6 x 5	ISO 4029, slotted, with flat point	39075-0-06050-R

39266 with hexagon socket and full dog point

Dimensions D x L_1	Form	Part-No.
M 4 x 5	ISO 4028	39266-0-04005-R
M 4 x 6	ISO 4028	39266-0-04006-R
M 5 x 6	ISO 4028	39266-0-05006-R
M 5 x 8	ISO 4028	39266-0-05008-R
M 5 x 10	ISO 4028	39266-0-05010-R
M 5 x 12	ISO 4028	39266-0-05012-R
M 5 x 16	ISO 4028	39266-0-05016-R
M 6 x 6	ISO 4028	39266-0-06006-R
M 6 x 8	ISO 4028	39266-0-06008-R
M 6 x 10	ISO 4028	39266-0-06010-R
M 6 x 12	ISO 4028	39266-0-06012-R
M 6 x 16	ISO 4028	39266-0-06016-R
M 6 x 25	ISO 4028	39266-0-06025-R
M 8 x 8	ISO 4028	39266-0-08008-R
M 8 x 12	ISO 4028	39266-0-08012-R
M 8 x 16	ISO 4028	39266-0-08016-R
M 8 x 25	ISO 4028	39266-0-08025-R
M 8 x 30	ISO 4028	39266-0-08030-R
M 10 x 18	ISO 4028	39266-0-10018-R

Please note packing unit (PU). PU = 10 pcs.

Screws

with hexagon

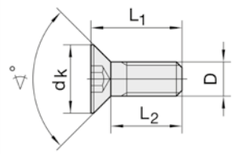

ISO 10642

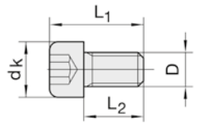

ISO 4762

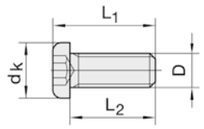

DIN 7984

39125 Countersunk screws with hexagon socket ISO 10642

Dimensions D x L_2	d_K mm	L_1 mm	Size	Part-No.
M 4 x 5	7,8	8	SW 3	39125-0-04008-R
M 5 x 9	9,4	12	SW 3	39125-0-05012-R
M 6 x 9	11,8	12	SW 4	39125-0-06012-R
M 6 x 12	11,8	16	SW 4	39125-0-06016-R
M 6 x 30	11,8	35	SW 4	39125-0-06035-R

39165 Socket head cap screws ISO 4762

Dimensions D x L_2	d_K mm	L_1 mm	Size	Part-No.
M 4 x 20	6,9	24	SW 3	39165-0-04020-R
M 5 x 10	8,4	15	SW 4	39165-0-05010-R
M 5 x 16	8,4	21	SW 4	39165-0-05016-R
M 6 x 8	9,9	14	SW 5	39165-0-06008-R
M 6 x 14	9,9	20	SW 5	39165-0-06014-R
M 8 x 8	12,9	16	SW 6	39165-0-08008-R
M 8 x 10	12,9	18	SW 6	39165-0-08010-R
M 8 x 12	12,9	20	SW 6	39165-0-08012-R
M 8 x 14	12,9	22	SW 6	39165-0-08014-R
M 8 x 20	12,9	28	SW 6	39165-0-08020-R

39265 Hexagon screws with flat head DIN 7984

Dimensions D x L_2	d_K mm	L_1 mm	Size	Part-No.
M 6 x 14	9,9	18	SW 4	39265-0-06014-R
M 6 x 25	9,9	29	SW 4	39265-0-06025-R
M 8 x 20	12,9	25	SW 5	39265-0-08020-R
M 8 x 25	12,9	30	SW 5	39265-0-08025-R
M 8 x 30	12,9	35	SW 5	39265-0-08030-R

Please note packing unit (PU). PU = 10 pcs.

Screws

slotted and Torx

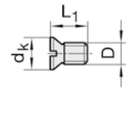

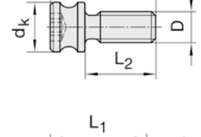

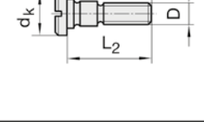

39052 / 39054 / 39075

Dimensions D x L_1	d_K mm	L_2 mm	Part-No.
ISO 2009, covering screw (tools for portable routers)			
M 3,5 x 3,5	5,1	6,0	39052-0-03500-R
Special adjusting screw for drills			
M 5 x 11,4, T20	8,0	17,0	39075-0-05017-R
Covering screw for ball bearing guide sets			
M 3,5 x 13,6	7,0	15,5	39054-0-03500-R

Please note packing unit (PU). PU = 10 pcs.

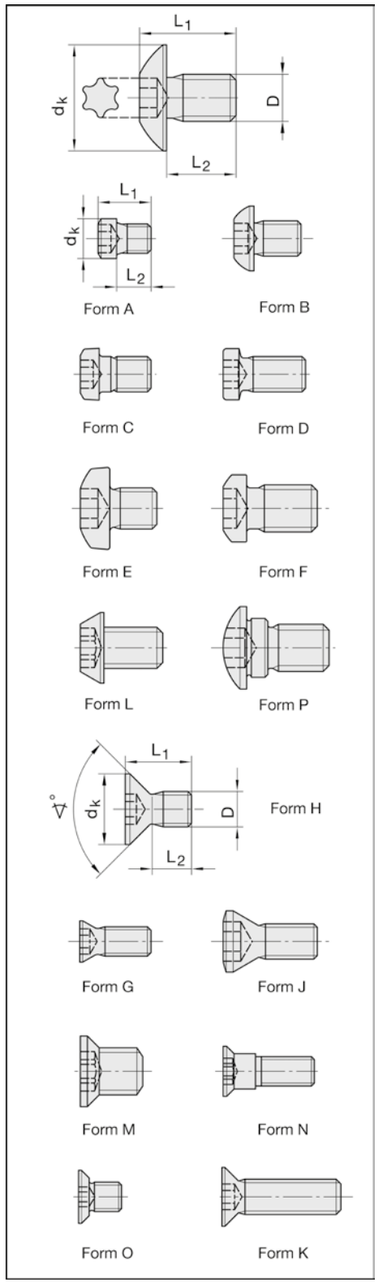

39076 - 39086

Dimensions D x L_2	Form of head	d_K mm	L_1 mm	Torx size	Part-No.
Clamping screws, extra large head					
M 3,5 x 4	-	9	6,3	T15	39076-0-03500-R
M 4 x 4	-	9	6,3	T15	39076-0-04040-R
M 4 x 5,9	-	9	8,2	T15	39076-0-04000-R
M 4 x 7	-	9	9,4	T15	39076-0-04070-R
M 4 x 9	-	9	11,3	T15	39076-0-04090-R
Torx screws					
M 2,5 x 3	A	3,4	4,5	T 8	39080-0-25301-R
M 2,5 x 4	A	3,4	5,5	T 8	39080-0-25401-R
M 3 x 4	B	5,4	5,7	T 9	39081-0-03040-R
M 3 x 4,4	C	4,4	6,0	T 8	39081-0-03050-R
M 3 x 5,4	D	4,4	7,0	T 8	39080-0-30701-R
M 3 x 3,3	B	5,4	4,9	T 9	39081-0-03033-R
M 3,5 x 4	E	7,0	6,5	T15	39081-0-03540-R
M 3,5 x 4	L	6,0	6,1	T15	39080-0-03540-R
M 3,5 x 4,8	L	6,0	6,8	T15	39080-0-03548-R
M 3,5 x 5,5	D	6,0	7,9	T15	39080-0-35551-R
M 3,5 x 6,5	E	6,0	8,9	T15	39080-0-35651-R
M 3,5 x 6,5	E	7,0	9,0	T15	39081-0-03565-R
M 3,5 x 7	L	6,0	9,0	T15	39080-0-03570-R
M 3,5 x 6	E	6,0	9,0	T15	39082-0-03565-R
M 4 x 4,8	F	5,7	6,6	T15	39081-0-04048-R
M 4 x 5	E	7,0	7,5	T15	39081-0-04050-R
M 4 x 5,5	F	5,8	7,5	T15	39080-0-40552-R
M 4 x 6	F	5,8	8,1	T15	39081-0-04060-R
M 4 x 6 (w. collar)	P	7,0	8,0	T15	39081-0-04006-R
M 4 x 7 (w. collar)	P	7,0	9,0	T15	39081-0-04070-R
Torx countersunk screws					
M 2,5 x 3, 60°	G	4,3	5,5	T 7	39084-0-02555-R
M 3 x 2, 60°	J	5,3	5,5	T 9	39084-0-03055-R
M 3 x 3,5, 90°	H	6,6	5,5	T 9	39085-0-03055-R
M 3 x 3,3, 60°	J	5,0	6,3	T10	39084-0-03060-R
M 3 x 4,5, 60°	J	5,0	7,5	T10	39084-0-03061-R
M 3 x 4,5, 60°	G	5,0	7,5	T 8	39084-0-03075-R
M 3 x 4, 60°	J	5,2	8,0	T 9	39084-0-03089-R
M 3 x 4, 60°	J	5,2	8,0	T15	39084-0-03080-R
M 3,5 x 2, 55°	J	5,3	5,5	T15	39084-0-03555-R
M 3,5 x 3, 90°	K	5,0	5,2	T 9	39084-0-03552-R
M 3,5 x 6, 90°	H	6,0	9,1	T 9	39084-0-03590-R
M 4 x 0,5 x 2,0, 90°	M	6,0	3,2	T 9	39084-0-04032-R
M 4 x 0,5 x 4, 90°	K	6,0	5,3	T 9	39084-0-04053-R
M 4 x 5, 90°	M	8,4	6,7	T15	39085-0-04067-R
M 4 x 5, 60°	J	5,6	8,0	T15	39084-0-04080-R
M 5 x 5,5, 90° f. spurs	O	9,0	7,0	T15	39085-0-05007-R
M 5 x 6, 90°	H	9,2	9,0	T20	39085-0-05009-R
M 5 x 9,5, 90°	K	7,4	12,0	T20	39085-0-05011-R
M 5 x 9, 90°	K	9,1	12,0	T20	39085-0-05012-R
M 5 x 13,5 (w. collar),90°	N	8,5	15,5	T20	39086-0-05015-R
M 6 x 7,5, 90°	K	9,8	10,0	T20	39085-0-06010-R
M 6 x 9, 90°	K	9,8	12,0	T20	39085-0-06012-R
M 6 x 11,5, 90°	K	9,8	14,0	T20	39085-0-06014-R
M 6 x 17,5, 90°	K	9,8	20,0	T20	39085-0-06020-R
M 6 x 27,5, 90°	K	9,8	30,0	T20	39085-0-06030-R
M 6 x 32,5, 90°	K	9,8	35,0	T20	39085-0-06035-R

Please note packing unit (PU). PU = 10 pcs.

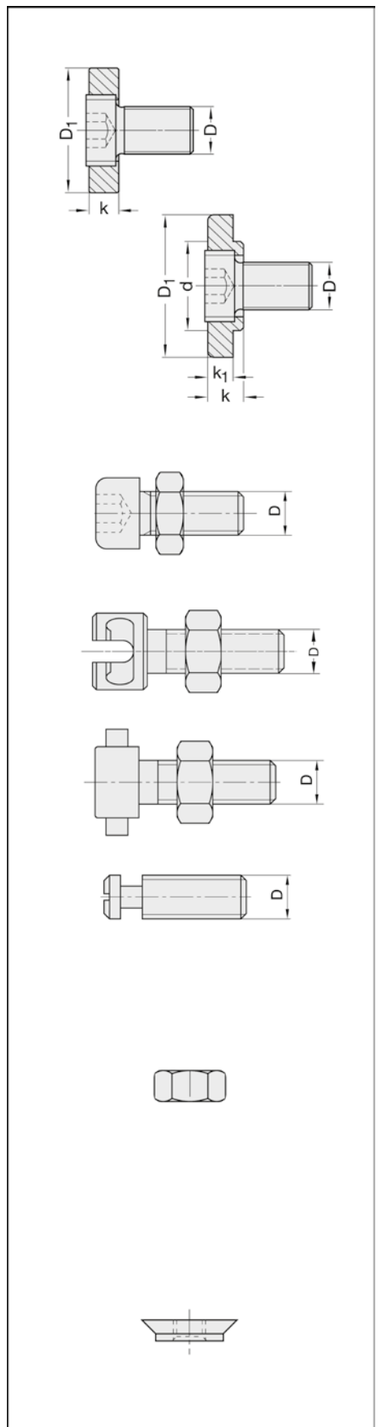

39200 Retaining screws

D mm	D_1 mm	k / k_1 mm	For arbor d mm	Part-No.
M 8	20	7 / -	16	39200-0-08000-R
M 10	28	8 / -	20	39200-0-10000-R
M 12	35	9 / -	25	39200-0-12000-R
M 16, without collar	42	10 / -	30	39200-0-16000-R
M 16, with collar	42	12 / 8,5	30	39200-0-42000-R
M 16, with collar	48	12 / 8,5	30 (No. 21090)	39200-0-30000-R
M 20, with collar	58	12 / 8,5	40 (No. 21090)	39200-0-40000-R

Please note packing unit (PU). PU = 1 pc.

All JSO-arbors are equipped with this clamping element.
It consists of a draw-in-bolt with hexagon socket and driver ring with thread.

39264 Adjusting screws complete with counternut

Dimensions	Part-No.
M 6	39264-0-06025-R
M 8	39264-0-08025-R

Please note packing unit (PU). PU = 5 pcs.

39190 Security screws for hydraulic clamping chucks

Dimensions	Adaptor Type	Part-No.
M 8	JSO 21016	39190-0-08001-R
M 8	LEUCO PS 25	39190-0-08010-R
M 8	LEUCO PS 2000	39190-0-08020-R

Please note packing unit (PU). PU = 1 pc.

39192 Pin (carrier pin)

Dimensions	for use e.g.	Part-No.
6 x 14	JSO No. 21090, 39495	39192-0-06014-0

Please note packing unit (PU). PU = 1 pc.

39150 Hexagon nuts

Dimensions	Form	Part-No.
M 4	ISO 8673	39150-0-04000-R
M 5	ISO 8673	39150-0-05000-R
M 6	ISO 8673	39150-0-06000-R
M 6	ISO 4035, small	39150-0-06001-R
¼" x 28 Gg.	-	39150-0-06300-R
M 8	ISO 8673	39150-0-08000-R

Please note packing unit (PU). PU = 10 pcs.

39153 Nuts for reversible TC tips

Dimensions mm	Description	Part-No.
M 4 x 0,5 x 1,1	D 10 (f.spurs 1,2 mm) up from 07/10 mod.	39153-0-10011-0
M 4 x 0,5 x 1,6	D 10 (f. spur 1,2 mm) up to 06/10 model	39153-0-10016-
M 4 x 0,5 x 2,2	D 10 (f. spur 1,7 mm)	39153-0-10022-0
M 4 x 0,5 x 1,6	D 12 (f. raker on No. 60255)	39153-0-12016-0
M 4 x 0,5 x 2,2	D 12 (f. raker 18 x 18 x 2,5)	39153-0-12022-0
M 4 x 0,5 x 2,8	D 12 (f. raker 18 x 18 x 3,0)	39153-0-12028-0

Please note packing unit (PU). PU = 10 pcs.

Clamping wedges

39100 for JSO No. 22060, 60200 and No. 60250

Design	Part-No.
No. 22060	
30 mm	39100-0-03001-0
50 mm	39100-0-05001-0
No. 60200/60250	
9,5 mm, for rev. TC tip 10,5 x 12 mm	39100-0-01050-0
7,5 mm, for rev. TC tip 7,5 x 12 mm	39100-0-00750-0

39340 for JSO router cutters No. 22270 and No. 22340

Design	Part-No.
No. 22270 for	
12 x 25 mm, R	39340-0-00025-0
No. 22340 for	
8 x 20 mm, R	39340-0-08020-R
10 x 20 mm, R	39340-0-10020-R
10 x 25 mm, R	39340-0-10025-R
12 x 20 mm, R	39340-0-12020-R
12 x 30 mm, L	39340-0-12030-L
12 x 30 mm, R	39340-0-12030-R
14 x 30 mm, L	39340-0-14030-L
14 x 30 mm, R	39340-0-14030-R
16 x 50 mm, R	39340-0-16050-R

39360 for JSO router cutters No. 22360

Design	Part-No.
16 x 30 mm, L	39360-0-16030-L
16 x 30 mm, R	39360-0-16030-R
16 x 50 mm, L	39360-0-16050-L
16 x 50 mm, R	39360-0-16050-R
18 x 30 mm, L	39360-0-18030-L
18 x 30 mm, R	39360-0-18030-R
18 x 50 mm, L	39360-0-18050-L
18 x 50 mm, R	39360-0-18050-R
20 x 30 mm, L	39360-0-20030-L
20 x 30 mm, R	39360-0-20030-R
20 x 50 mm, L	39360-0-20050-L
20 x 50 mm, R	39360-0-20050-R
22 x 30 mm, R	39360-0-22030-R

Please note packing unit (PU). No. 39100 and No. 39340 = PU 2 pcs - No. 39360 = PU 1 pc.

Clamping body set 3-parts

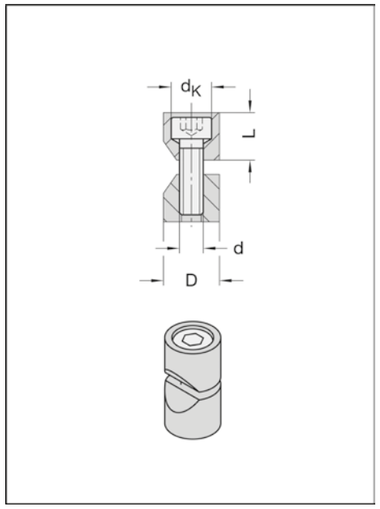

39095 for JSO No. 22095, L2= 40 mm and 50 mm

Dimensions D x L_2	d_K mm	d mm	Part-No.
11,8 x 10	8,8	5 / M5	39095-0-00003-0

For use in JSO vari-angle cutterhead No. 22095, L_2= 40 mm and 50 mm (page 4.24).
Each swivelling tip retainer require 1 set.
Each set is consisting of 1 pc clamping body (with / without thread) as well as 1 pc screw M5 x 20,7 mm.

Please note packing unit (PU). PU = 2 set

Distance spacers

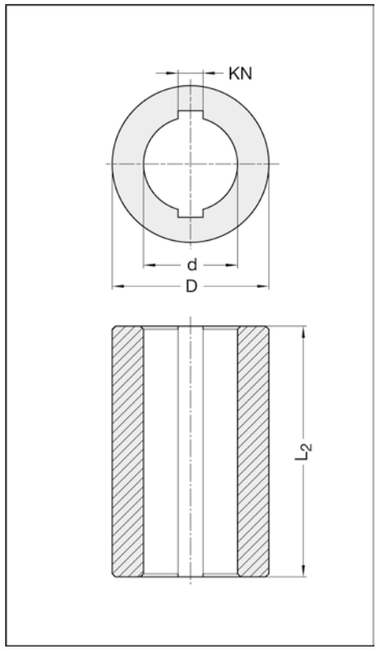

39561 Aluminium spacers

D mm	For L_2 mm	d mm	KN/TK mm	Part-No.
50	40	30	8 x 2	39561-0-50040-1
50	55	30	8 x 2	39561-0-50055-1
50	80	30	8 x 2	39561-0-50080-1
50	90	30	8 x 2	39561-0-50090-1
50	116	30	8 x 2	39561-0-50116-1
60	40	30	8 x 2	39561-0-60040-1
60	55	30	8 x 2	39561-0-60055-1
60	80	30	8 x 2	39561-0-60080-1
60	90	30	8 x 2	39561-0-60090-1
60	116	30	8 x 2	39561-0-60116-1

Technical details

Precision, face ground spacers made of high-quality light metal for weight reduction, with hard-anodized surface.
With double keyway.

Application

For assembling and simultaneous filling up of cutter heads or cutter sets with bore on arbors with feather key.
For right-hand or left-hand rotation.

Appropriate arbors d= 30 mm, with feather key, No. 21086 (page 6.9).

Example of application:
JSO helical cutterhead No. 62300 assembled on extra long arbor No. 21086 for use in 5-axis machining.

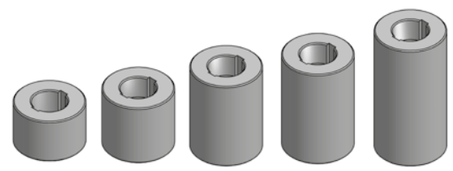

Spare Parts, Accessories ...

Standard Spacers

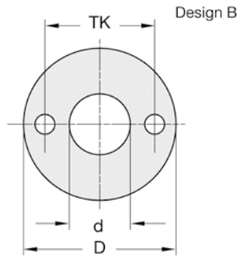

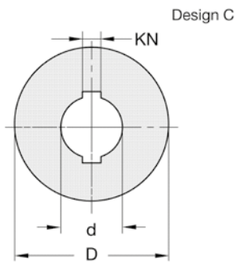

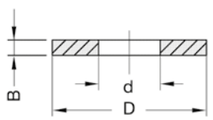

39540 / 39541 Single spacers

D mm	B mm	d mm	Design	KN/TK mm	Part-No.
With drive holes					
50	0,1	20	B	36	39540-0-00120-2
50	0,2	20	B	36	39540-0-00220-2
50	0,5	20	B	36	39540-0-00520-2
50	1,0	20	B	36	39540-0-01020-2
50	2,0	20	B	36	39540-0-02020-2
50	3,0	20	B	36	39540-0-03020-2
50	5,0	20	B	36	39540-0-05020-2
50	10,0	20	B	36	39540-0-10020-2
60	0,1	30	B	48	39541-0-00100-2
60	0,2	30	B	48	39541-0-00200-2
60	0,5	30	B	48	39541-0-00500-2
60	1,0	30	B	48	39541-0-01000-2
60	2,0	30	B	48	39541-0-02000-2
60	3,0	30	B	48	39541-0-03000-2
60	5,0	30	B	48	39541-0-05000-2
60	10,0	30	B	48	39541-0-10000-2
With double keyway					
35	0,1	20	C	6 x 1,5	39540-0-30120-1
35	0,5	20	C	6 x 1,5	39540-0-30520-1
35	1,0	20	C	6 x 1,5	39540-0-31020-1
35	2,0	20	C	6 x 1,5	39540-0-32020-1
35	3,0	20	C	6 x 1,5	39540-0-33020-1
35	5,0	20	C	6 x 1,5	39540-0-35020-1
50	0,1	20	C	6 x 1,5	39540-0-00120-1
50	0,2	20	C	6 x 1,5	39540-0-00220-1
50	0,5	20	C	6 x 1,5	39540-0-00520-1
50	1,0	20	C	6 x 1,5	39540-0-01020-1
50	2,0	20	C	6 x 1,5	39540-0-02020-1
50	3,0	20	C	6 x 1,5	39540-0-03020-1
50	5,0	20	C	6 x 1,5	39540-0-05020-1
50	10,0	20	C	6 x 1,5	39540-0-10020-1
60	0,1	30	C	8 x 2	39541-0-00100-1
60	0,2	30	C	8 x 2	39541-0-00200-1
60	0,5	30	C	8 x 2	39541-0-00500-1
60	1,0	30	C	8 x 2	39541-0-01000-1
60	2,0	30	C	8 x 2	39541-0-02000-1
60	3,0	30	C	8 x 2	39541-0-03000-1
60	5,0	30	C	8 x 2	39541-0-05000-1
60	10,0	30	C	8 x 2	39541-0-10000-1

Technical details
Design **B**: with 2 drive holes of 6 mm
Design **C**: with double keyway

Application
For assembling of cutters with 20 or 30 mm bore on all arbors.

Spacer sets

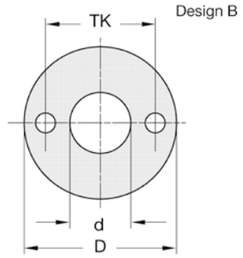

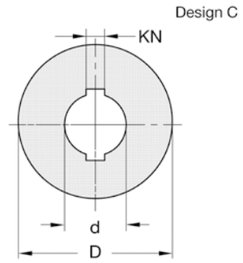

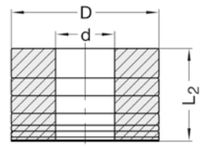

39548

D mm	For L_2 mm	d mm	Design	KN/TK mm	Part-No.
With drive holes					
50	55	20	B	36	39548-0-20055-2
60	40	30	B	48	39548-0-30040-2
60	55	30	B	48	39548-0-30055-2
60	80	30	B	48	39548-0-30080-2
With double keyway					
50	40	20	C	6 x 1,5	39548-0-20040-1
50	55	20	C	6 x 1,5	39548-0-20055-1
50	70	20	C	6 x 1,5	39548-0-20070-1
60	40	30	C	8 x 2	39548-0-30040-1
60	55	30	C	8 x 2	39548-0-30055-1
60	80	30	C	8 x 2	39548-0-30080-1

Technical details
Design **B**: with 2 drive holes of 6 mm
Design **C**: with double keyway

Spacer set, consisting of:
L_2 = 33 mm 1 x 10,0 / 2 x 5,0 / 2 x 3,0 / 2 x 2,0 / 2 x 1,0 / 1 x 0,5 mm
L_2 = 40 mm 2 x 10,0 / 2 x 5,0 / 1 x 3,0 / 2 x 2,0 / 2 x 1,0 / 1 x 0,5 mm
L_2 = 55 mm 3 x 10,0 / 2 x 5,0 / 2 x 3,0 / 2 x 2,0 / 2 x 1,0 / 2 x 0,5 mm
L_2 = 70 mm 4 x 10,0 / 3 x 5,0 / 2 x 3,0 / 2 x 2,0 / 2 x 1,0 / 2 x 0,5 mm
L_2 = 80 mm 5 x 10,0 / 3 x 5,0 / 2 x 3,0 / 2 x 2,0 / 2 x 1,0 / 2 x 0,5 mm

Application
Spacer set for assembling of cutters with 20 or 30 mm bore on all arbors.

Spacer Set

for No. 64410 - 418

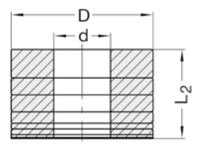

39548 Spacer set to rounding over / bevelling set

D mm	For L_2 mm	d mm	KN mm	Part-No.
35	35	20	6 x 1,5	39548-0-00001-1

Technical details
Face ground spacers. The spacer set is sufficient for materials of any thickness and all clamping lengths.

Set consisting of 5 x 5,0 / 2 x 2,0 / 4 x 1,0 / 3 x 0,5 / 5 x 0,1 mm.
Single spacers on page 7.26.

Application
Spacer set for use in rounding over / bevelling cutter set No. 64410 - 64418 (page 4.32).

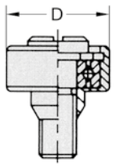

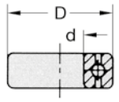

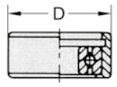

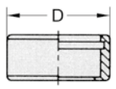

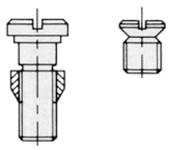

39050 - 39064

Article		Part-No.
Guide set 9 mm	complete	39064-0-09000-R
Guide set 12 mm	complete	39064-0-09012-R
Guide set 12 mm	complete, with synthetic-quide ring	39064-0-09012-K
Guide set 14 mm	complete	39064-0-09014-R
Guide set 14 mm	complete, with synthetic-quide ring	39064-0-09014-K
Guide set 16 mm	complete	39064-0-09016-R
Guide set 18 mm	complete	39064-0-09018-R
Guide set 20 mm	complete	39064-0-09020-R
Guide set 21 mm	complete	39064-0-09021-R
Guide set 22 mm	complete	39064-0-09022-R
Guide set 24 mm	complete	39064-0-09024-R
Guide set 26 mm	complete	39064-0-09026-R
Ball bearing 6,35 mm	d= 3,175 mm	39050-0-06350-0
Ball bearing 9 mm	d= 4,0 mm	39050-0-09000-0
Ball bearing 9,5 mm	d= 4,76 mm	39050-0-09500-0
Ball bearing 10 mm	d= 4,0 mm	39050-0-10040-0
Ball bearing 12 mm	d= 4,0 mm	39050-0-12000-0
Ball bearing 12,7 mm	d= 4,76 mm	39050-0-12700-0
Ball bearing 12,7 mm	d= 6,35 mm	39050-0-12702-0
Ball bearing 15 mm	d= 6,0 mm	39050-0-15006-0
Ball bearing 15,9 mm	d= 6,35 mm	39050-0-15900-0
Ball bearing 16 mm	d= 6,0 mm	39050-0-16006-0
Ball bearing 16 mm	d= 8,0 mm	39050-0-16008-0
Ball bearing 19 mm	d= 6,0 mm	39050-0-19006-0
Ball bearing 19 mm	d= 6,35 mm	39050-0-19000-0
Ball bearing 19 mm	d= 8,0 mm	39050-0-19008-0
Ball bearing 22 mm	d= 7,0 mm	39050-0-22000-0
Ball bearing 22 mm	d= 8,0 mm	39050-0-22008-0
Ball bearing 9/12 mm	d= 4,0 mm, with mounted guide ring	39061-0-09012-0
Ball bearing 9/14 mm	d= 4,0 mm, with mounted guide ring	39061-0-09014-0
Ball bearing 12,7/15,9 mm	d= 4,76 mm, with mounted guide ring	39061-0-12715-0
Ball bearing 15,9/19 mm	d= 6,35 mm, with mounted guide ring	39061-0-15919-0
Ball bearing 15,9/21 mm	d= 6,35 mm, with mounted guide ring	39061-0-15921-0
Ball bearing 15,9/22 mm	d= 6,35 mm, with mounted guide ring	39061-0-15922-0
Ball bearing 9,5/12,3 mm	d= 4,76 mm, guide ring forced on by pressure	39062-0-12300-0
Ball bearing 16/20 mm	d= 8,0 mm, guide ring forced on by pressure	39061-0-16020-0
Ball bearing 19/23 mm	d= 6,0 mm, guide ring forced on by pressure	39062-0-19023-0
Ball bearing 22/28 mm	d= 8,0 mm, guide ring forced on by pressure	39062-0-22028-0
Ball bearing 22/32 mm	d= 8,0 mm, guide ring forced on by pressure	39062-0-22032-0
Ball bearing 12 mm	d= 4,0 mm, synthetic coated, (with guide ring)	39061-0-09012-K
Ball bearing 14 mm	d= 4,0 mm, synthetic coated, (with guide ring)	39061-0-09014-K
Ball bearing 15,9 mm	d= 6,35 mm, synthetic coated	39050-0-15900-K
Ball bearing 19 mm	d= 6,35 mm, synthetic coated	39050-0-19000-K
Ball bearing 20 mm	d= 6,35 mm, synthetic coated	39050-0-20000-K
Ball bearing 20 mm	d= 6,35 mm, 5°, synthetic coated	39050-0-20005-K
Ball bearing 20 mm	d= 6,35 mm, 11°, synthetic coated	39050-0-20011-K
Ball bearing 22 mm	d= 6,35 mm, 11°, synthetic coated	39050-0-22011-K
Ball bearing 25 mm	d= 9,5 mm, synthetic coated	39050-0-25095-K
Ball bearing 28 mm	d= 9,5 mm, synthetic coated	39050-0-28095-K
Ball bearing 28 mm	d= 9,5 mm, 5°, synthetic coated	39050-0-28005-K
Guide ring 12 mm	for ball bearing 9 mm w. locking ring	39060-0-12000-0
Guide ring 14 mm	for ball bearing 9 mm w. locking ring	39060-0-14000-0
Guide ring 15,9 mm	for ball bearing 12,7 mm w. locking ring	39060-0-15900-0
Guide ring 19 mm	for ball bearing 15,9 mm w. locking ring	39060-0-19000-0
Guide ring 21 mm	for ball bearing 15,9 mm w. locking ring	39060-0-21000-0
Guide ring 22 mm	for ball bearing 15,9 mm w. locking ring	39060-0-22000-0
Bush	D= 3,5mm/M 3,5 mm, f. ball bearing guide set	39053-0-05600-0

Please note packing unit (PU). No. 39050 - 39062: PU = 5 pcs. - No. 39064: PU = 1 pc.

39810 / 39820 Reducing diameter

Cutting materials	Part-No.
Twist drills / Dowel drills / Hinge boring bits	
HS/WS/SP	39810-4-00001-0
TC-tipped	39810-5-00001-0
Solid TC	39810-6-00001-0
Router cutters Z2	
HS	39820-4-00001-0
TC-tipped	39820-5-00001-0

Reducing diameter on drills and router cutters up to 14 mm Ø
(reducing max. 1,0 mm depending on diameter of drill)
More than 14 mm Ø + 20%

39840 Shortening of spiral length

Cutting-materials	Part-No.
HS/WS/SP	39840-4-00001-0

For HS/WS/SP up to 14 mm Ø
More than 14 mm Ø + 20%

39850 / 39851 Shortening of parallel shank

Cutting-materials	Part-No.
Up to shank Ø 20 mm	
HS/WS/SP	39850-4-00001-0
TC-tipped	39850-5-00001-0
High-density metal (D)	39850-5-00001-D
On router cutters with interchangeable tips (incl. assembling/disassembling tips)	
Steel-body	39851-5-00001-0
High-density metal (D)	39851-5-00001-D

39860 - 39862 / 39865 Reducing parallel shank

Cutting-materials	Part-No.
Up to 1 mm in diameter	
HS/WS/SP	39860-4-00001-0
TC-tipped	39860-5-00001-0
Up to 3 mm in diameter	
HS/WS/SP	39861-4-00001-0
TC-tipped	39861-5-00001-0
High-density metal (D)	39861-5-00001-D
More than 3 mm in diameter	
HS/WS/SP	39862-4-00001-0
TC-tipped	39862-5-00001-0
High-density metal (D)	39862-5-00001-D
Cutters with interchangeable tips up to 35 mm Ø (incl. assembling/disassembling tips)	
Steel-body	39865-5-00001-0
High-density metal (D)	39865-5-00001-D

39830 - 39838 Modifying face

Cutting materials	Description	Part-No.
Dowel drills		
TC only	ground to shape A (ZDF)	39830-5-00001-0
TC only	ground to shape B	39830-5-00001-B
Hinge boring bits		
TC only	shorten / remove centre point	39835-5-00001-0
TC only	ground to shape SF	39837-5-00001-0
TC only	ground to shape DF	39838-5-00001-0
Drilling cutters		
Solid TC	ground to flat peak	39836-6-00000-0

39870 Shortening and reducing of parallel shank

Cutting materials	Description	Part-No.
TC-tipped	for stockade drills No. 30175-5 only	39870-5-00001-0

39880 Driving flat

Cutting materials	Description	Part-No.
HS/TC	affixing, on parallel shanks 8 or 10 mm	39880-5-00001-0

39885 Driving flat / length adjusting screw

Cutting materials	Description	Part-No.
TC only	affixing, on parallel shanks 8 or 10 mm	39885-5-00001-0

39890 Driving flat for Weldon tool holder

Cutting materials	Part-No.
Affixing Weldon flat	
TC-tipped	39890-5-00001-0
High-density metal (D)	39890-5-00001-D
Solid TC	39890-6-00001-0

39710 Enlarging bore diameter

Description	Part-No.
Saw blades / grooving saws / grooving cutters	
up to ND* = 10 mm	39710-0-01000-0
Other types of cutters with bore / cutterheads	
up to ND* = 20 mm	39710-0-02000-0
up to ND* = 50 mm	39710-0-05000-0
up to ND* = 80 mm	39710-0-08000-0

*ND = boss thickness

39720 Assist keyway

Description	Part-No.
Saw blades / grooving saws / grooving cutters	
up to ND* = 10 mm	39720-0-01000-0
Other types of cutters with bore / cutterheads	
up to ND* = 20 mm	39720-0-02000-0
up to ND* = 50 mm	39720-0-05000-0
up to ND* = 80 mm	39720-0-08000-0

*ND = boss thickness
(single), double keyway (DKN) on request

39790 Alteration of cutting width

Description	Part-No.
Grooving saws / grooving cutters	
TC-tipped Z2	39790-5-00002-0
TC-tipped Z6	39790-5-00006-0
TC-tipped Z12	39790-5-00012-0

Depending on the boss thickness.

39790 - 39795 Enlarging inside (d) bore

Description	Part-No.
No. 39225	39790-4-00001-0
No. 30650 TC	39792-5-00001-0
No. 30755 TC	39795-5-00001-0

On split adaptor bushes and counterinks (up to max. 1,0 mm).
Not possible on HS.

39825 Changing radius on TC profile router cutters

Cutting materials	Part-No.
TC-tipped	39825-5-00001-0

Services

for shank-type tools and tools with bore

39740 / 39745 Counter sunk- / pin holes

Description		Part-No.
Drilling without countersunks		
1 pin hole		39740-0-00001-0
2 pin holes		39740-0-00002-0
4 pin holes		39740-0-00004-0
Drilling with countersunks		
2 pin holes		39745-0-00002-0
4 pin holes	for No. 21079 or No. 39498-0	39745-0-00004-0
6 pin holes	for No. 39495	39745-0-00006-0
8 pin holes	for No. 39498-0	39745-0-00008-0

For aggregates = with or without countersunk holes.

39910 Assembling in Thermotec chuck

Description	Part-No.
Router cutters	
PCD/solid TC/rev.TC	39910-0-00001-0

39920 Assembling with Preziso turbine

Description	Part-No.
Router cutters	
PCD/solid TC/rev.TC	39920-0-00001-0

39921 Tool change on Preziso turbine

Description	Part-No.
Router cutters	
PCD/solid TC/rev.TC	39921-0-00001-0

39750 Fine balancing of tool holder

Description	Part-No.
Router cutters	
PCD/solid TC/rev.TC	39750-0-00001-0

Template costs

for profile knives and back supports with special profiles

39800

Description	Part-No.
Not applicable up from 10 pcs. / for repeat orders of the same profile	39800-0-00000-0

Symbols and Abbreviations

Technical details / Explanation

Ø	= diameter
∢°	= angle on cutter / drill, bevel angle
A	= dimension A
AB	= pull stud
AS	= number of cutting edges / of cutting pins
a	= eccentricity
a_1	= machining length
a_2	= machining width
a_p	= axial adjustment
A	= adjusting length
b	= body thickness
B	= cutting -/ working width, thickness of spacers
CNC	= Computerized Numerical Control
$D/D_1/D_2$	= diameter
D max.	= largest diameter
D min.	= smallest diameter
$d/d_1/d_2$	= bore, diameter of guide pin or ball bearing guide, small diameter
DIN	= German Industry Standard
d_k	= screw head diamter
DKN	= double keyway
EL	= clamping length
F	= cutting circle diameter / wings
$h/h_1/h_2$	= thickness of material
H	= height of knife
HDF	= high density fibre board
HSK	= hollow taper shank
HS	= high speed steel
ISO	= International Organisation for Standardisation
JIS	= Japanese Industrial Standard
KN	= feather key / single keyway
L	= left-hand rotation
L_1	= total length, overall length
L_2	= cutting length, drilling depth, adjusting length, clamping length
L_3	= adjusting length, height of bevel, length of , counter bore or centre point
L_4	= longest cutting edge with up-cut (PCD), change point of shear angle (rev. tips)
M	= metric thread
MDF	= medium density fibre board
MAN	= manual feed
MEC	= mechanical feed
MK	= morse taper
m. E.	= with adjusting screw
mm	= millimetres
n	= R.P.M.
$n_{max.}$	= R.P.M. max
ND	= boss thickness
NL	= pinholes
P	= profile, profile depth
PCD	= polycrystalline diamond
PU	= packing unit
$R/R_1/R_2$	= radius (if used as last figure in the part no.: right-hand rotation)
S	= shank diameter, shank size, thickness
SK	= steep taper
SP	= alloyed tool steell
SR/SL	= roughing- / finishing design
ST	= stellite
SW	= spanner size
$T/T_1/T_2$	= pitch, profile - /grooving -/rebate depth, Torx
T.C.	= tungsten carbide
T.C.T.	= tungsten carbide tipped
T.H.	= tipping height (pcd)
TK	= pitch circle diameter
v_f	= feed rate
V	= spurs
VHW	= solid tungsten carbide
WS	= unalloyed tool steel
Z	= number of teeth (not in all cases identical with the number of cutting edges)
ZL	= finger length

(1) Quotations / Placing of Orders / Confirmation of orders
Our products are sold exclusively to commercial customers and public institutions at home and abroad. Quotations, orders and other agreements are subject strictly to our terms and conditions. They are considered as being accepted by placing an order or by accepting the delivery of the goods. Unchallenged order confirmations are conside-red as explicitly accepted by the buyer. JSO shall not be bound by deviating terms and conditions of the business partner even without express objection. Our offer is only to be considered as binding after we have sent confirmation of the order. Items quoted as ex stock are subject to prior sale. Devia-tions from details in printed an electronic docu-ments are permissible unless not explicitly marked as binding by us. An order is only considered as having been accepted after either a confirmation of the order has been sent by JSO, or once the goods have been delivered without a confirmation of order. Subsequent changes require our written confirmation or consent. The customer is responsi-ble for the correctness of his documents (for ex-ample drawings, samples, gauges, etc.) and infor-mation on conditions of use. Oral information re-garding dimen-sions and the like must be con-firmed in writing. The cost of delivering samples will be charged for. Quotations, correspondence, or-der confirmations or other documents or samples handed over for other reasons remain our prop-erty. They may not be improperly used and are subject to copyright. Re-productions, imitations or transmission are not permitted. We retain the right to make design changes and modifications for the further development of our products.

(2) Prices
The prices quoted are recommended retail prices at the time of printing. Our prices are quoted in € (Euro), plus value added tax (VAT) ex Neresheim-Elchingen, or in case of export shipments free German border or FOB German port. Freight charges, postage and insurance are excluded. The same applies to partial shipments. We retain the right to charge an additional fee for small orders. If shipment to a second ad-dress is required, a flat rate cost compensation will be charged. The latest valid amounts are available including their validity periods per download from our homepage www.jso.de under Current tariffs. The confirmed prices are valid for a delivery time of up to 2 months from the day of confirmation of the order, otherwise the prices existing on the day of delivery will be charged.

(3) Delivery / Return of Goods
Unless explicitly otherwise agreed, the buyer ac-cepts partial deliveries, insofar as they are reason-able. In the case of customised goods, the buyer agrees to accept modera-te under or over delivery. Cancellation or postponement of deliveries re-quires our written agreement. Any expenses in-curred up to this time are to be borne by the buyer. Return of tools is only permitted with our con-sent. In the case of returned goods, the sender agrees to an appropriate deduction for reconditioning, costs of returning to the store, etc. Specially made tools and spare parts cannot be re-turned. In prin-risk.

(4) Delivery time
In the absence of an agreed fixed delivery date or our express confirmation, the delivery dates quoted are not binding. The delivery time quoted starts with the date of the order confirmation or production release. Reasonable de-lays in delivery do not entitle the customer to hedge purchases, claims for damage, compensation for damage caused by delay or to cancellation of the purchase pages, strikes, lock-outs, shortage of raw materi-als, defective goods, etc., release us from liability to deliver for the period of the disturbance and to the ex-tent of their effect. The same applies to deliver-ies from our subcontractors not carried out cor-rectly or not on time. Neither is the supplier respon-sible for these holdups in delivery if they occur during an already on-going delay.

(5) Payment terms
If payment after delivery has been agreed, our invoices are payable within 10 days net, in each case from the date of the invoice. Repairs must be paid immediately. Payment by cheque is subject to the prior consent of the supplier. Pro-cessing charges are at the expense of the writer of the cheque and payable immediately on receipt of the debit note. Cheques are only deemed to have been paid after they have been cashed. Bills of exchange are not accepted in lieu of payment. In case of late payment we are entitled to claim the costs incurred and charge interest customary in banking or in the case of the situation getting worse to deliver against prepayment or cash on delivery or to withdraw from fulfilment of the com-mitments entered into. In the event of a customer becoming insolvent we are to be notified immedi-ately. Delivery to companies not known to us is on the basis of cash on delivery. Withholding payment or off-setting disputable counterclaims by the re-cipient of the invoice is not permitted.

(6) Retention of Ownership
Delivered goods remain our property until all claims have been fully settled. The buyer as re-seller is entitled to resell the retained goods within the scope of the normal course of business while se-curing our rights and claims. How-ever, he is not entitled to pledge or assign them as security. We must be immediately notified of goods which are seized or retained as security. The seizure of goods for which we hold the property rights, i.e. which belong to us, is to be reported to us immedi-ately. Due to the retention of ownership we are entitled in case of a delay or infringement of the contract to claim possession of all delivery items without any explanation. Goods returned to us will be reused accordingly and deducted from the

(7) Warranty / Design
We guarantee the delivery of high quality tools of suitable design and quality as well as of optimum technical performance provided they are used correctly by the buyer under the conditions origi-nally specified by him. We do not accept liability for hidden defects (faulty material, etc.) outside our control, normal wear and tear, alterations made by third parties or improper use or maintenance. Noti-fication of defects must be given in writing no later than ten days after the date of the invoice. Follow-ing this period of delay, no claims will be accepted.
If faults are subsequently found which were not immediately visible, the buyer must immediately submit a written notification following the detection of the defect. Any defects accepted by us will be remedied for the buyer free of charge; replace-ment or remedying the defect remains our deci-sion. We do not accept liability for any damage or loss resulting from defects. Setting off or withhold-ing of due accounts based on notifications of de-not permitted. All other claims for damages are excluded. The warranty period is 3 months. Within the scope of technical progress we expressly re-serve the right to modify designs and use alterna-tive materials. Thus illustrations and descriptions in our catalogue, literature and any other descriptive material may not be considered as binding. In case of customised manufacture any warranty by the supplier for excess length in milling and drilling tools with shafts is excluded.

(8) Place of Fulfilment / Place of Jurisdiction /Applicable Law
The place of fulfilment for delivery and payment is Oberkochen. The place of jurisdiction is the court with jurisdiction for the principal place of business of our company. All legal relation-ships shall be governed solely by German law. However we also reserve the right to take legal action at the court with jurisdiction for the principal place of business of the buyer.

(9) General
Reproduction of our catalogue and/or our price-list or parts thereof is not permitted without our prior written agreement. Any exceptions are sub-ject to our prior consent in writing. Should any indi-vidual clauses of the general terms and conditions be deemed ineffective, or should they be replaced by other clauses, the remain-ing terms of the agreement remain unaffected and shall remain binding. With the publication of a new price list all previous price lists, offers and individual price quo-tations are no longer valid.

GENERAL TERMS AND CONDITIONS

Precision creates value

Jakob Schmid
GmbH & Co. KG

Bahnhofstraße 54
73450 Neresheim-Elchingen
Tel.: +49 7367 407020
info@jso.de - www.jso.de

Precision TOOLS from the tool specialists

Don‘t miss a trend
- follow us on:

Precision creates value